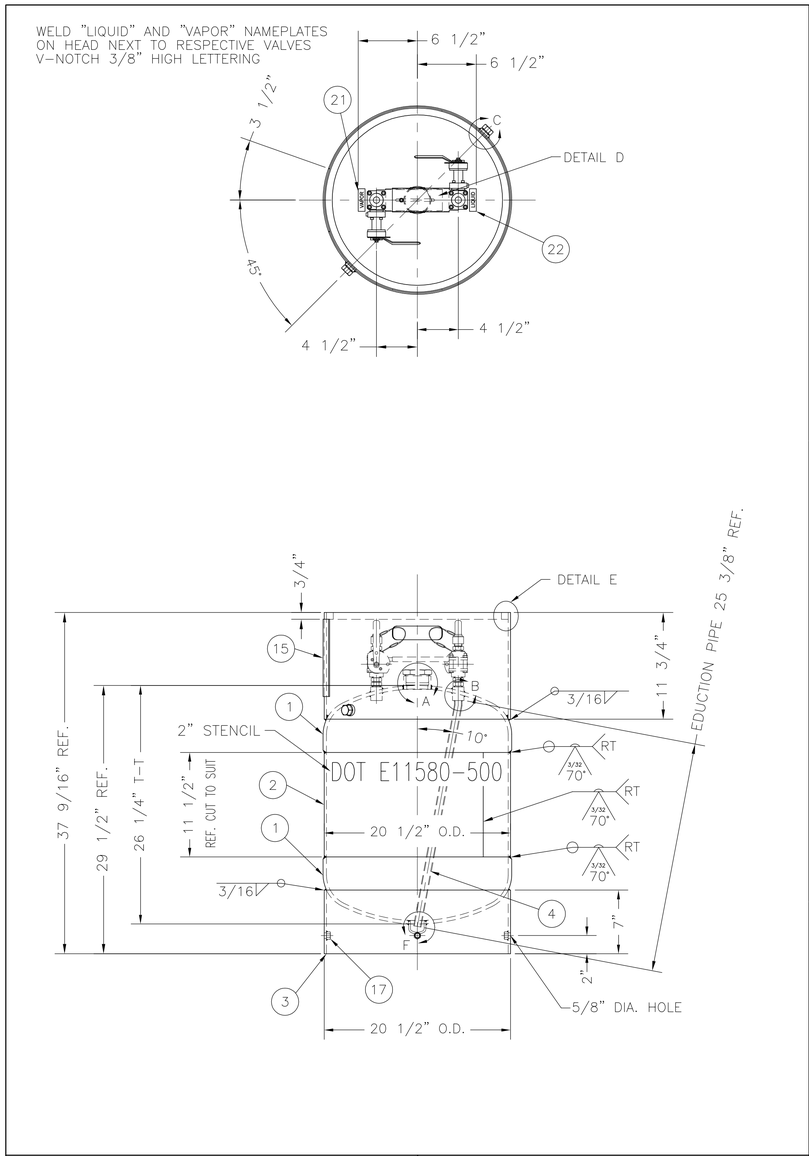

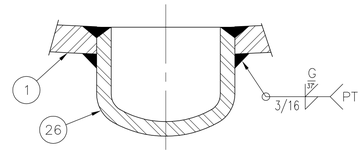

DETAIL F SUMP

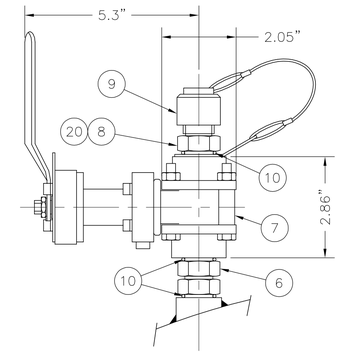

LIQUID AND VAPOR CONNECTION DETAIL

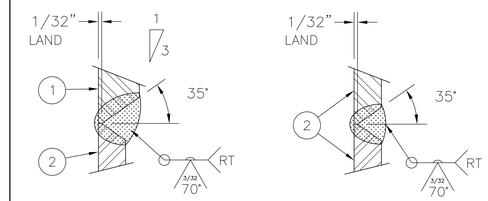

CIRCUMFERENTIAL SEAM DETAIL

PREPARE JOINTS PER WELD PROCEDURE

LONGITUDINAL SEAM DETAIL

DETAIL E

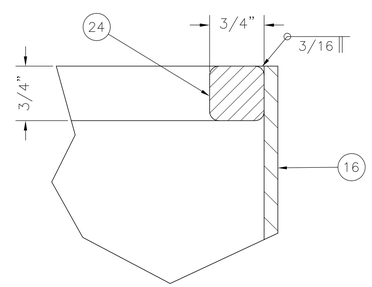

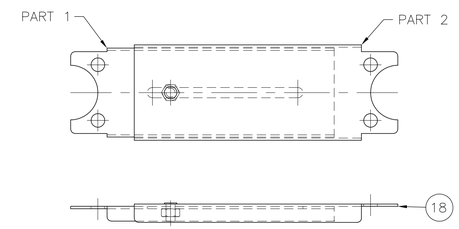

DETAIL D VALVE ROTATION BRACKET

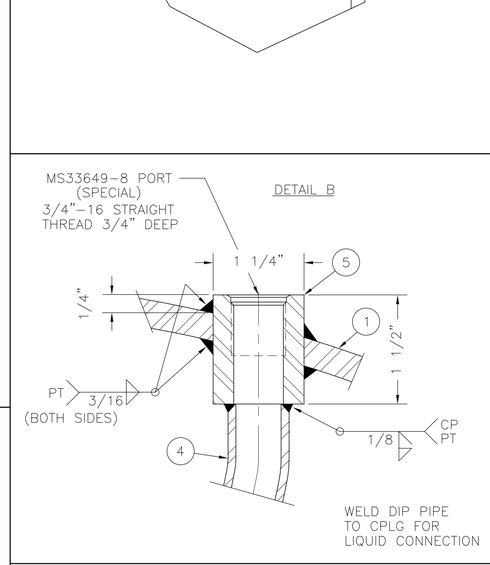

DETAIL B

WELD DIP PIPE TO CPLG FOR LIQUID CONNECTION

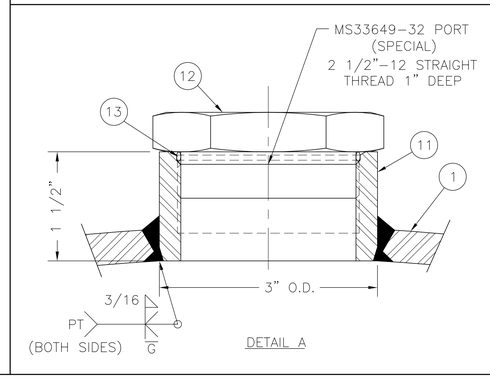

DETAIL A

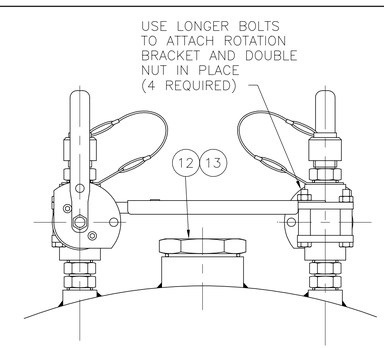

VALVE LAYOUT DETAIL

DETAIL C

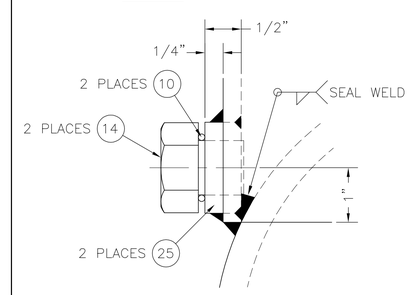

SECONDARY CONTAINMENT
DRAIN AND PRESS. CONNECTION

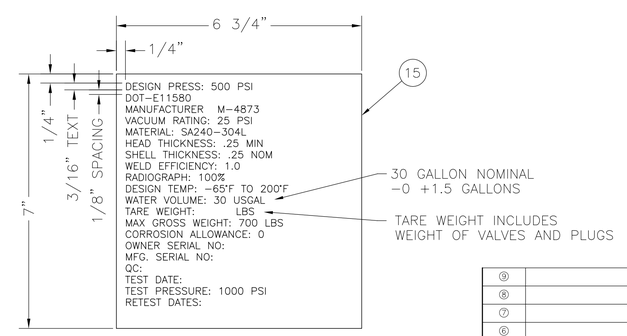

STAMPING PLATE DETAIL

1) Cylinder will be furnished commercially clean by CBCo.
All special cleaning, including pickle, passivation or electropolishing (if required), to be done by customer or his agent.

2) Straight thread fittings shall be assembled using a calibrated torque wrench to the following lubricated values:

TORQUE (inch-pounds)

FITTING	MAXIMUM
1/2"	230
2"	1,300

Threads shall be sparingly lubricated prior to assembly with KRYTOX

● DESIGN & FABRICATION DATA ●

Working Pressure:	500 PSI 34.5 BAR – 25 PSI VACUUM
Working Temperature:	-65°F -53.9°C TO 200°F 93°C
Design Code:	USDOT 178.61 SPEC 4BW EXEMPTION E-11580
Nominal Wall Stress:	(DOT4BW500) 34,880 PSI
Radiograph:	178.61(m) FULL E=1.0
Stress Relieve:	NONE
Joint Efficiency:	1.0
Corrosion Allowance:	0
Factor of Safety:	N.A.
Pressure Test:	ONE FINISHED CYLINDER OUT OF EACH LOT OF 500 OR LESS HYDROTEST TO 2000 PSI W/O BURST. LEAK TEST EACH PRODUCTION CYL TO 500 PSI (BY CUST.) WITH 90% NITROGEN 10% GHE MIX. HYDRO TEST EACH CYLINDER TO 1000 PSI.
Physical Test:	ONE FINISHED CYLINDER OUT OF EACH LOT OF 200 OR LESS SHALL BE TESTED PER 178.61(j)
Drop Test:	DESIGN SHALL MEET THE REQUIREMENTS OF 173.40(d)(2)
Interior:	SEE NOTE No. 1
Exterior:	BEAD BLAST
Paint:	NONE
Heat Treatment:	NONE
Estimated Water Capacity:	(30 GAL.) 113.56 L
Estimated Tank Weight:	325 LBS. 147.42 KG AVE. TARE WT.

● MATERIALS ●

SA240-304L
CHEMICAL ANALYSIS REQUIREMENTS 304L (ASTM A240)
C-.030 MN-2.0 MAX P.045 MAX S-.030 MAX SI-.75 MAX
CR-18.0-20.0 NI-8.0-12.0 MO-.5 MAX
ALL COMPONENTS CONTAIN LESS THAN 0.5% Mo EXECPT AS NOTED
HEAD: .250 MIN (6.35 MM)
SHELL: .250 NOM (6.35 MM) (.245 MIN) COLD ROLLED
Couplings: ASME SA-182-F304L FORGED STEEL

Nameplate: STAINLESS STEEL 11 GAUGE ASTM A-240 TYPE 304

● MATERIALS ●

LOC	QTY	DESCRIPTION
1	2	HEAD 20" I.D. x .25 MIN. ELLIPTICAL-2:1 RATIO 304L SS
2	1	SHELL 20 1/2" O.D. x 1/4" x 11 1/2" LG. 304L SS
3	1	BOTTOM SKIRT 20" I.D. x 1/4" x 8" LG. 304L SS
4	1	EDUCTION PIPE 1/2" SCH 10 x 25 1/2" 304L SS
5	2	MS33649-8 PORT 1/2" (1 1/4" DIA. x 1 1/2" LG.) 304L SS
6	2	UNION, ADJUSTABLE END, 1/2" KC-170-8 316 SS
7	2	VALVE-BALL-1/2"-80K80507-5-MCF-316L SS
		W/ MS33649-8 END CONNECTIONS
8	2	ADAPTER, FLRD, 37 DEG, 1/2" KC-112-8 316 SS
9	2	CAP ASSEMBLY, 1/2" KC-150-8 316 SS
10	8	MS9956-08 PTFE PACKING-O-RING
11	1	MS33649-32 PORT 2" (3" DIA. x 1 1/2" LG.) 321 SS
12	1	PLUG, HEX HEAD 2" KC-174-32 316 SS
13	1	MS9956-32 PTFE PACKING-O-RING
14	2	PLUG, HEX HEAD 1/2" KC-174-08 316 SS
15	1	STAMPING PLATE 6 3/4" x 7" x 11 GA. 304 SS
16	1	TOP SKIRT 20" I.D. x 1/4" x 11 3/4" LG. 304L SS
17	4	NUT, HEX. HD. 1/2"-13 STAINLESS STEEL
18	1	VALVE ROTATION BRACKET PER SKETCH 18009F-4
19	6	1" SCH 40 PVC x 1" LG.
20	2	RING SEAL – 1/2" KC-103-8 PTFE
21	1	"VAPOR" NAMEPLATE 3/4" x 2" x 1/8" 304L SS
22	1	"LIQUID" NAMEPLATE 3/4" x 2" x 1/8" 304L SS
23	6	1/2" FLAT WASHER STAINLESS STEEL
24	1	TOP SKIRT REBAR 3/4" SQ. x 60 1/2" LG. 304L SS
25	2	MS33649-8 PORT 1/2" (1 1/4" DIA. x 1/2" LG.) 304L SS
26	1	WELD CAP, 1 1/2" SCH. 40 304L SS
27		
28		
29		

● REFERENCE DRAWINGS ●

SK-18009F4, SK-18014-1, SK-102202

Rev. No.	Change	Date	By
⑨			
⑧			
⑦			
⑥			
⑤			
④			
③			
②			
①	UPDATED DESIGN DATA	11/03/02	ARM

● REVISIONS ●

THE COLUMBIANA BOILER CO.
COLUMBIANA, OHIO

GENERAL ARRANGEMENT
30 GAL – HYDRAZINE CYLINDER

Checked:	Date: 10/16/02	DRAWING NUMBER 18056F	
Appr'd By:	Dw'n By: ARM		
Appr'd By:	Scale: 1/8	REV. 1	SHEET 1 OF 1