T.O. 37C2-8-19-14

TECHNICAL MANUAL

ILLUSTRATED PARTS BREAKDOWN

5000 GALLON LIQUID OXYGEN/NITROGEN STORAGE TANK TYPE TMU-20/E

Part Number	National Stock Number
80-507	3655-01-105-8765YD
SV-50-LN-SK	3655-01-263-7635YD

LOX EQUIPMENT COMPANY

F41608-87-D-0220

DISTRIBUTION STATEMENT - Distribution authorized to U.S. Government agencies and their contractors for Administrative or Operational Use, 14 March 1991. Other requests for this document shall be referred to San Antonio ALC/TIRTR, Kelly AFB, TX 78241-5000.

HANDLING AND DESTRUCTION NOTICE - Handle in compliance with the distribution statement and destroy by any method that will prevent disclosure of contents or reconstruction of the document.

PUBLISHED UNDER AUTHORITY OF THE SECRETARY OF THE AIR FORCE

14 MARCH 1991

LIST OF EFFECTIVE PAGES

INSERT LATEST CHANGED PAGES. DESTROY SPERSEDED PAGES.

NOTE: The portion of the text effected by the changes is indicated by a vertical line in the outer margins of the page. Changes to illustrations are indicated by miniature pointing hands. Changes to wiring diagrams are indicated by shaded areas.

Dates of issue for original and changed pages are:

Original ... 0 ... 14 Mar 91

TOTAL NUMBER OF PAGES IN THIS PUBLICATION IS 52 CONSISTING OF THE FOLLOWING:

Page No.	* Change No.
Title	0
A	0
i thru ii	0
iii	0
iv Blank	0
1-1 thru 1-6	0
2-1 thru 2-36	0
3-1 thru 3-4	0

* Zero in this column indicates an original page.

FOREWORD/PREFACE

Purpose. This technical manual will provide the using activity with operation and service instructions for the Liquid Oxygen and Nitrogen Storage and Transfer Tank, Type TMU-20/E.

Scope. This manual will provide the using activity with applicable information required on the handling, storage, and hazards associated with the use of cryogenic equipment and products. Any corrections regarding this technical manual should be submitted in accordance with T.O. 00-5-1.

Throughout this manual the unit will primarily be called the Tank. It may also be called the Storage Tank. Tanks referenced but not covered by this manual will contain additional descriptions. Example: supply tank and receiving tank. Liquid oxygen/nitrogen may be referred to as the product, or abbreviated as LOX/LIN in parts of this manual.

TABLE OF CONTENTS

SECTION		PAGE
	FOREWORD/PREFACE.....	ii
I	INTRODUCTION.....	1-1
1-1	General.....	1-1
1-4	Table of Contents..	1-1
1-6	Maintenance Parts.. List	1-1
1-9	Figure and Index... Number	1-1
1-10	Part Numbers.....	1-1
1-11	Description.....	1-2
1-12	Units Per Assembly.	1-2
1-13	Usable On Code.....	1-2
1-14	Source Maintenance, and Recoverability (SMR) CODES	1-2
1-15	Numerical Index....	1-2
1-17	Part Number.....	1-2
1-19	Figure and Index... No.	1-2
1-20	Quantity per..... Article	1-3
1-21	Source Codes.....	1-3
1-23	Code "P" - Parts... Under Inventory Stock Control	1-3
1-24	Code "PA".....	1-3
1-25	Code "COM" - ..... Commercially Available Items Which Are Not Catalogued, Procured or Stocked By National Stock Number (NSN)	1-3
1-27	Code "M" - ..... Manufacture, Parts Not Procured	1-3
1-29	Code "A" - ..... Assembly, Assembly Not Procured	1-3
1-31	Code "XA" - Part... Not Procured, Use Next Higher Assembly	1-3
1-33	Code "XB" - Parts.. Considered Impracticble For Service Manufacture or Procurement And For Which No Usage Is Anticipated	1-4
1-35	Repair Codes.....	1-4
1-37	Category Code.....	1-4
1-38	Maintenance Code...	1-4
1-39	Code "Z" - No..... Repair	1-4
1-40	Code "F" - No..... Repair: Recondition	1-4
1-41	Code "D" - Limited. Field Repair: Depot Overhaul	1-4
1-42	Code "L" - Depot... Level Maintenance Only	1-5
1-43	How To Use The..... Illustrated Parts Breakdown	1-5
1-45	How To Find A Part. Number By Use Of The Table Of Contents and Illustrations	1-5
1-46	Vendor's Code.....	1-5
II	MAINTENANCE PARTS LIST....	2-1
III	NUMERICAL INDEX.....	3-1

LIST OF ILLUSTRATIONS

FIGURE	TITLE	PAGE
2-1.	Tank Assembly, Type.. TMU-20/E	2-1
2-2.	Head Assembly, Safety	2-3
2-3.	Manway Assembly.....	2-4
2-4.	Housing, Cabinet.....	2-5
2-5.	Spool Assembly, Vent.	2-7
2-6.	Spool Assembly,..... Service	2-10
2-7.	Spool Assembly, Fill. & Drain	2-12
2-8.	Spool Assembly,..... Vacuum Line with Filter	2-14
2-9.	Coil Assembly,..... Pressure Build-up	2-15
2-10.	Spool Assembly, Full. Trycock	2-16
2-11.	Thermocouple Assembly	2-17
2-12.	Panel Assembly,..... Instrument	2-18
2-13.	Hose Assembly, 1 Inch Lox	2-20
2-14.	Head, Safety Pressure	2-21
2-15.	Spool Assembly,..... Relief & Drain	2-22
2-16.	Valve Assembly, 3/8". Globe	2-24
2-17.	Valve Assembly, 1"... Globe	2-26
2-18.	Valve Assembly, 2"... Globe	2-28
2-19.	Valve Assembly, 3"... Globe	2-30
2-20.	Coupling Assembly,... Lox, 1" Male Half	2-32
2-21.	Coupling Assembly,... Lox, 3-1/2" Male Half	2-33
2-22.	Cabinet Assembly.....	2-34

SECTION 1

INTRODUCTION

1-1. GENERAL.

1-1.1. This Illustrated Parts Breakdown lists and illustrates the parts composing the Liquid Oxygen Storage and Transfer Tank, 5,000 Gallon Capacity, Type TMU-20/E, Manufactures by LOX EQUIPMENT COMPANY, Delphi, Indiana.

1-1.2. This illustrated Parts Breakdown is divided into three sections; namely Section I, Introduction, Section II, Group Assembly Parts List, and Section III, Numerical Index.

1-2. TABLE OF CONTENTS.

1-2.1. The Table of Contents list the title and first page number of each section and the page number of each illustration.

1-3. MAINTENANCE PARTS LIST.

1-3.1. The Maintenance Parts List (MPL) consists of illustration and columnar listings of parts. This MPL Section is divided into represented main groups, assemblies, sub-assemblies, or systems. Each assembly is listed in its order of disassembly and is followed immediately by its component parts properly indented to show their relationship to the assembly.

1-3.2. Attaching parts are listed immediately beneath the item to be attached and preceding any detail parts of the item. All attaching parts are listed at the same indention as the part they attach and are captioned "(ATTACHING PARTS)." Attaching parts are separated from subsequent listing by the symbol, "(----*----)".

1-3.3. FIGURE AND INDEX NUMBER. This column contains the assigned number of the illustration in which the assembly or part is shown, and the index numbers called out in the illustration. The figure number is separated from the index number by a hyphen.

1-3.4. PART NUMBERS. This column contains the part number assigned to each part in accordance with the following: LOX EQUIPMENT COMPANY manufactured or assembled parts have a part number consisting of the assembly drawing number (i.e. 80-507). The drawing completely describes the specific part without further modifying data. Parts where the assembly drawing number alone is not sufficient to describe the part without amplifying data are identified by the detail drawing and piece number on that detail drawing (i.e. 79-442-3-4 for an assembly of pieces 3 and 4 on detail drawing 79-442). Parts procured by LOX EQUIPMENT COMPANY from commercial suppliers show the true manufacturer by FSCM number in the FSCM column and the true manufacturer's part or figure number as the part number. Some common and bulk items of hardware listed in this manual are identified by "LOX inventory numbers" (i.e. I12345-6, etc.).

NOTE

Most parts have special features for CRYOGENIC application. These features are noted in the description column.

1-3.5. DESCRIPTION. The description of all item appearing i the Group Assembly Parts List consist of the nomenclature placed in the drawing title block. Wording is arranged so that the identifying noun is the first part of the description. If the item is an assembly, the word ASSEMBLY will be listed immediately following the noun. This followed by the balance of the modifying words included in the drawing title description.

1-3.6. UNITS PER ASSEMBLY. This column contains the number of units required per sub-assembly, and per component as applicable. If more than one assembly is required, the total of such assemblies are shown. For detail of sub-assembly parts of this major assembly, the quantity required for one major assembly is shown. For oversize or undersize parts, the letters "A/R" are shown in the "Units per Assembly" column to indicate, "AS REQUIRED". Where items are listed for reference purposes the letters "REF" are inserted in the, "Units per Assembly" column.

1-3.7. USABLE ON CODE. This column is left blank intentionally unless a component is indicative of either an oxygen or nitrogen tank or a tank manufactured before or after 1990. If a component is only to be used on an oxygen tank, then the usable on code is "A". If a component is only to be used on a nitrogen tank, then the usable on code is "B". If a component is only to be used on a tank manufactured before 1990, then the usable on code is "C". If a component is only to be used on a tank manufactured after 1990, then the usable on code is "D".

1-3.8. SOURCE, MAINTENANCE, AND RECOVERABILITY (SMR) CODES. This manual contains joint military serv uniform SMR codes. Definitions of those SMR codes are available in T.(00-25-195.

1-4. NUMERICAL INDEX.

1-4.1. The Numerical Index section this publication indicates the part number of the item, related figure a index number as appears in the Grou Assembly Parts section, source code applied to the item, and the repair code determines expandability, cost category, disposition, and repair le for each listed part.

1-4.2. PART NUMBER. Part numbers appearing in this column are listed numerical order. Arrangement of the numbering of parts starts on the left-hand column and continues from left to right until precedence is established. The order of precedenc beginning on the extreme left-hand position in part number numerical arrangement is as follows:

Letters A through Z
Numerals 0 through 9

NOTE

Alphabetical O's are considered a numerical zeros.

1-4.3. The order of precedence in continuing the part number arrangeme on the second and succeeding positio of the part number from left to righ as follows:

Space (blank column)
Diagonal (slant)
Point (period)
Dash (-)
Letters A through Z
Numerals 0 through 9

1-4.4. FIGURE AND INDEX NUMBER. This column contains the figure and index number(s) as applicable for all parts listed. For Government Standard Parts and Contractor Standard Parts, only the first figure and index number that occurs is listed. When an assembly or part has not been assigned an index number in the Group Assembly Parts List, only the figure number appears. The part number is not repeated when more than one figure and index number is shown for the same part.

1-4.5. QUANTITY PER ARTICLE. This column contains the total units required per article. When more than one article is covered in the publication and the total quantity of a part is not the same for all articles covers, the largest quantity for any one article is shown. The total quantity appears on the same line as the part number regardless of the different figure and index numbers listed. The abbreviation "A/R" is used to signify, "AS REQUIRED" when no definite quantity can be shown.

1-5. SOURCE CODES.

1-5.1. Definitions of Source Codes are sub-codes of the Source Maintenance Repair (SMR) codes falling within the categories are as follows:

1-5.2. CODE "P" - PARTS UNDER INVENTORY STOCK CONTROL.

1-5.3. CODE "PA" identifies parts which may be requisitioned and installed by any maintenance level consistent with the commands authorized scope of maintenance. This code applies to parts which are impracticable to service manufacture. Code "PA" is applied to parts which usage is anticipated or known.

1-5.4. CODE "COM" - COMMERCIALLY AVAILABLE ITEMS WHICH ARE NOT CATALOGUED, PROCURED OR STOCKED BY NATIONAL STOCK NUMBER (NSN).

1-5.5. CODE "COM" - identifies commercially available item which are not catalogued, procured or stocked by National Stock Number (NSN), and which are obtained as required from local commercial suppliers.

1-5.6. CODE "M" - MANUFACTURE, PARTS NOT PROCURED.

1-5.7. CODE "MF" - identifies parts, the manufacture and installation of which is within the capabilities of field maintenance activities, and to which all the following conditions apply:

a. Procurement is not justified because of low usage or peculiar storage and installation factors. Needs are to be met by local manufacture only as required.

b. Manufacture does not require tools, equipment, or skills not normally authorized at field maintenance level.

c. Does not require test equipment not normally authorized at filed maintenance level.

d. Does not require material normally not available in Air Force inventory. The National Stock Number (NSN) for Bulk Stock used in the local manufacture of an item is normally listed in the item description of the Illustrated Parts Breakdown.

1-5.8. CODE "A" - ASSEMBLY, ASSEMBLY NOT PROCURED.

1-5.9. CODE "A" identifies items capable of being assembled at any level of maintenance and is applied to assemblies of two or more parts, at least one of which is purchased and carries an individual part number and description.

1-5.10. CODE "XA" - PART NOT PROCURED, USE NEXT HIGHER ASSEMBLY.

1-5.11. CODE "XA" identifies parts applicable at any level of maintenance consistent with the command's authorized scope of maintenance, and for which procurement of the next larger assembly so coded "PA" is normally justified. For example, an integral detail part, such as a welded segment inseparable from its assembly which, if required, would suggest extensive reconditioning of the assembly.

1-5.12. CODE "XB" - PARTS CONSIDERED IMPRACTICABLE FOR SERVICE MANUFACTURE OR PROCUREMENT AND FOR WHICH NO USAGE IS ANTICIPATED.

1-5.13. CODE "XB" is applied to main structural members of similar parts which, if required, would suggest extensive repair. The need for a part or parts coded "XB" should be obtained from depot salvage or procured on a one time basis. This type of item will not be stocked since no usage is anticipated and would be impracticable for service manufacture. Such parts shall be obtained from reclamation, or requisitioned through normal supply channels with supporting justification for one-time procurement and immediate issue.

1-6. REPAIR CODES.

1-6.1. A repair code consists of a of Alphabetical Designators, a Prefi Category Code and a Suffix Maintenan Code.

1-6.2. CATEGORY CODE. Category Cod assigned to non-expendable and expendable items are outlined below. The Repair Level represents the high level of repair for the item.

CODE	DESCRIPTION	REPAI LEVEI
T	Expendable, $10 or more	Depot
N	Expendable, Less than $100	Base

1-6.3. MAINTENANCE CODE. The Maintenance Code identifies the repairable or nonrepairable characte: of a given part and the depth of rep and the level of maintenance at whic repair will be accomplished. Definitions for repair codes are giv in paragraphs 1-39 through 1-42.

1-6.4. CODE "Z" - NO REPAIR. Code ' identifies items which are nonrepairable and have no reclamatio value. When these items fail, they will be disposed of at user level as condemned material.

1-6.5. CODE "F" - NO REPAIR: RECONDITION. Code "F" identifies assemblies or parts that will be reconditioned at the user level by adjusting, installing packing, cleaning, soldering broken connectio etc. If these items cannot be return to serviceable condition by such mean they will be disposed of at user leve as condemned material. No special tools are procured for maintenance of these items.

1-6.6. CODE "D" - LIMITED FIELD REPAIR: DEPOT OVERHAUL. Code "D" identifies items on which a limited degree of repairs can be accomplished by field level maintenance activities. The Specialized Repair Activity (SRA) is established for the overhaul of these items. A range of repair parts, tools, and technical order data consistent with the capacity of repair are procured and provided to applicable field maintenance level is necessarily determined by the degree of technical skills required and the cost of special tools, special test equipment, spare parts, and the predicted frequency of failure generations. If these items cannot be returned to serviceable condition with authorized parts and tools they will be returned to supply for shipment to the designated SRA.

1-6.7. CODE "L" - DEPOT LEVEL MAINTENANCE ONLY. Code "L" identifies items that will be repaired only at designated SRA. Repair parts and tools for repair are procured and provided only to these authorized activities. Required functional check-out and bench check equipment may be provided to applicable organizational and filed level maintenance activities for accomplishing external adjustment or calibration and for verifying serviceability of these items. If they are found unserviceable, they will be turned in to supply for shipment to the SRA.

1-7. HOW TO USE THE ILLUSTRATED PARTS BREAKDOWN.

1-7.1. To find the illustration for part if the part number is known:

a. Refer to Section III, Numerical Index, and find the part number in the "Part Number" column. Also obtain figure and index number from the "Fig. & Index No." column.

b. Refer to Section II, Group Assembly Parts List, and find the figure.

1-8. HOW TO FIND A PART NUMBER BY USE OF THE TABLE OF CONTENTS AND ILLUSTRATIONS.

a. Refer to Table of Contents and find the page number on which the assembly is illustrated.

b. Turn to the page and find the illustration of the part and its index number.

c. Refer to the index numbers on the Group Assembly Parts list and obtain the part number, description and quantity.

1-9. VENDOR'S CODE.

CODE	VENDOR'S NAME AND ADDRESS
00255	Futurecraft Corp. 15430 Proctor Ave. City of Industry, CA 91747
02570	Crawford Fitting Co. 29500 Solon Road Solon, OH 44139
02578	Douglas Studio Inc. Shielding Engineering Div. Chicago, IL
02697	Parker-Hannifin Corp. 2360 Palumbo Dr. Lexington, KY 40509
25515	ITT-Barton Instruments 580 Monterey Pass Rd. Monterey Park, CA 91755
71342	Rego Div. of Golconda Corp. 4201 West Peterson Ave. Chicago, IL 60646

CODE	VENDOR'S NAME AND ADDRESS
07707	USM Corp. 510 Rivers Dr. Shelton, CT 06484
12623	Whitney Company 318 Bishop Rd. Highland Heights, OH 44143
14487	Cryogenic Energy Co. 4955 Bannock St. Denver, CO 80216
18876	Army Missile Command Redstone Arsenal, AL 35809
19220	Eberhard Mfg. Co. 21944 Drake Rd. Strongsville, OH 44136
24446	General Electric Co. 3135 Easton Turnpike Fairfield, CT 06430
14818	Hoke Inc. 1 Tenekill Park Cresskill, NJ 07626
30780	Parker-Hannifin Corp. 17325 Euclid Ave. Cleveland, OH 44112
16750	Black, Sivalls & Bryson, Inc. 7455 East 46th St. P.O. Box 45590 Tulsa, OK 74145
34646	Ladish Co. 5481 South Packard Ave. Cudahy, WI 53110
48422	The William Powell Co. 2503 Spring Grove Ave. P.O. Box 14006 Cincinnati, OH 45214

CODE	VENDOR'S NAME AND ADDRESS
26984	Remko Mfg. Co. 1360 59 th St. P.O. Box 8216 Emeryville, CA 94662
52659	Rockwood Systems Corp. 30 Second St. South Portland, ME 04106
06234	Grinnel Fire Protection Systems Co., 10 Dorrance St. Providence, RI 02903
73475	Robertshaw Control Co. 2318 Kingston Pike S.W. P.O. Box 400 Knoxville, TN 37901
76381	Minnesota Mining & Mfg. Co. St. Paul, MN 55101
34351	National Aerospace Standards Washington, DC 20036
81348	Federal Specifications Promulagated, Washington, D
98750	San Antonio Air Logistics Center Kelly AFB, TX 78241

SECTION II

MAINTENANCE PARTS LIST

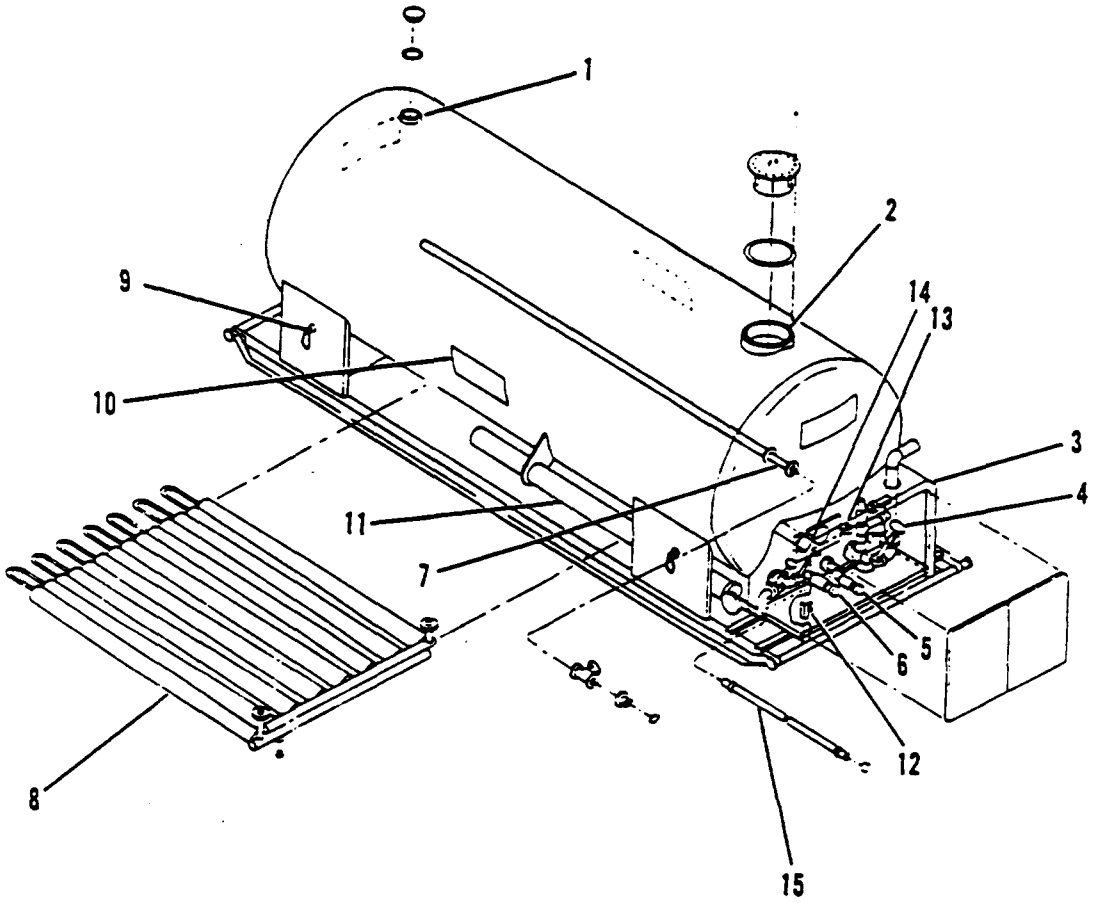

Figure 2-1. Tank assembly, Liquid Oxygen Storage, Type TMU-20/E

FIG. & INDEX NO.	PART NO.	FSCM	DESCRIPTION 1 2 3 4 5 6 7	UNITS PER ASSY.	USABLE ON CODE	SMR CODE
1-	80507		TANK ASSEMBLY, 5000 Gallon..... Liquid Oxygen/Nitrogen Storage, Type TMU-20/E	1		
-1	80-346		.HEAD, Safety (See Fig. 2).....	1		
-2	79-416		.MANWAY ASSEMBLY (See Fig. 3).....	1		
-3	80-361		.CABINET ASSEMBLY (See Fig. 22)...	1		
-4	80-424		.SPOOL ASSEMBLY, Vent (See Fig. 5)	1		
-5	80-426		.SPOOL ASSEMBLY, Service..... (See Fig. 6)	1		
-6	80-425		.SPOOL ASSEMBLY, Fill & Drain (See Fig. 7)	1		
-7	79-414-1-4		.SPOOL ASSEMBLY, Vaccum Line w/... Filter (See Fig. 8)	1		
-8	80-349		.COIL ASSEMBLY, Pressure Buildup.. (See Figure 9)	1		
-9	49B6564	18876	.RING, Lifting & Tiedown.....	4		PAF2
-10	8221044-01	98750	.DECAL, Liquid Oxygen & Safety.... (Requisition in accordance with Chapter 12, AFR6-1)	4	A	
	8221045-01	98750	.DECAL, Liquid Nitrogen & Safety.. (Requisition in accordance with Chapter 12, AFR6-1)	4	B	
-11	80-343		.TUBE ASSEMBLY, Hose Storage.....	1		
-12	80366		.SPOOL ASSEMBLY, Full Trycock (See Fig. 10)	1		
-13	70-302		.SPOOL ASSEMBLY, Thermocouple..... (See Fig. 11)	1		
-14	73-288		.PANEL ASSEMBLY, Instrument..... (See Fig. 12)	1		
-15	NO NUMBER	98750	.HOSE ASSEMBLY, 1 in. LOX..... (See Fig. 13)	1		

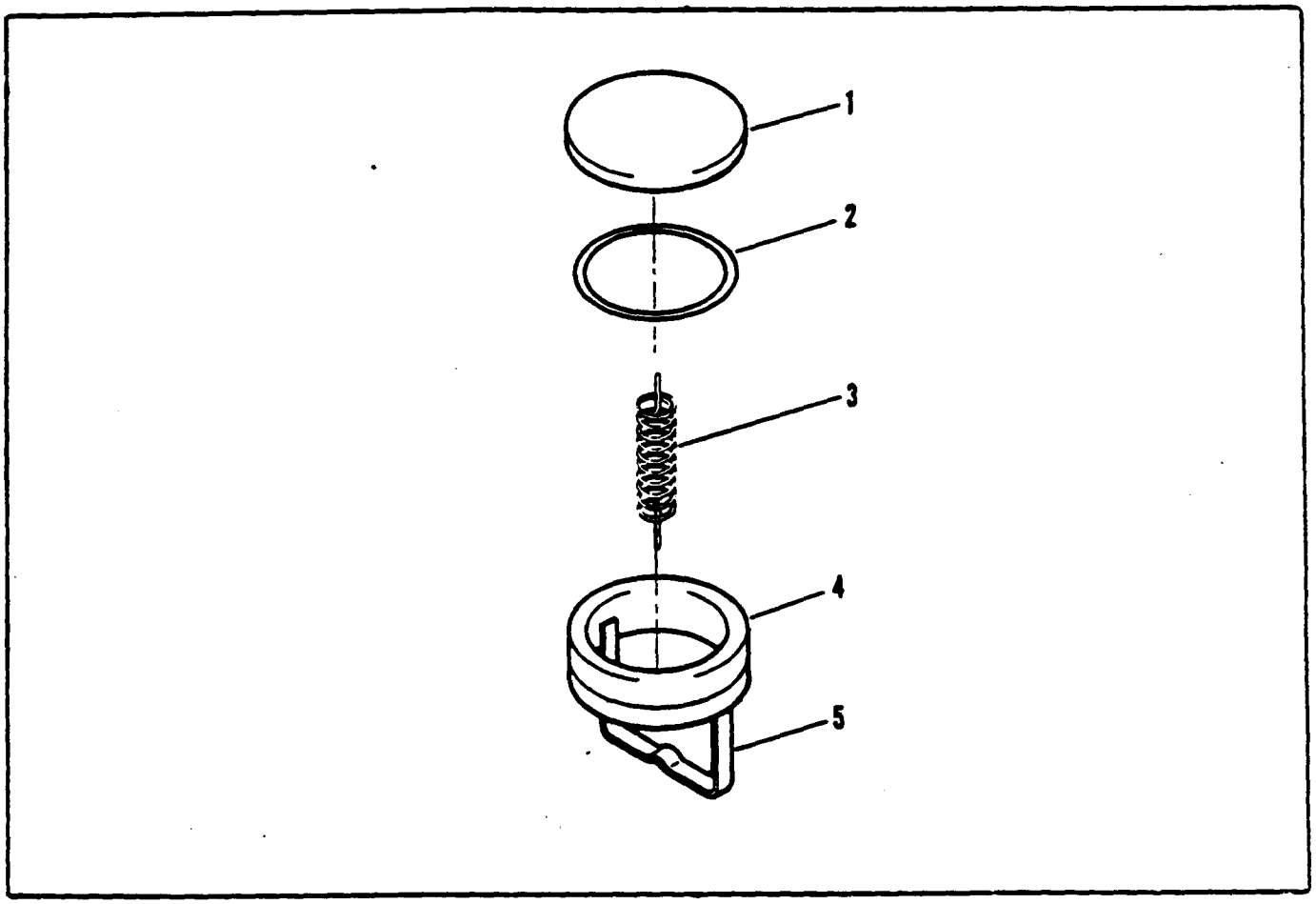

Figure 2-2. Head Assembly, Safety

FIG. & INDEX NO.	PART NO.	FSCM	DESCRIPTION 1 2 3 4 5 6 7	UNITS PER ASSY.	USABLE ON CODE	SMR CODE
2-	80-346		HEAD ASSEMBLY, Safety.....	1		
-1	67-063		.FLANGE, Relief Assembly.....	1		PAFZZN
-2	MS28776-430		.PACKING, Preformed.....	1		PAFZZN
-3	I16068-1		.SPRING, Helical, 1-1/4 in. OD x 3 in. Lg.	1		PAFZZN
-4	67-063-3		.TUBE, (Welded to Tank).....	1		PAFZZN
-5	80-346-3		.RETAINER, (Welded to Tank).....	1		

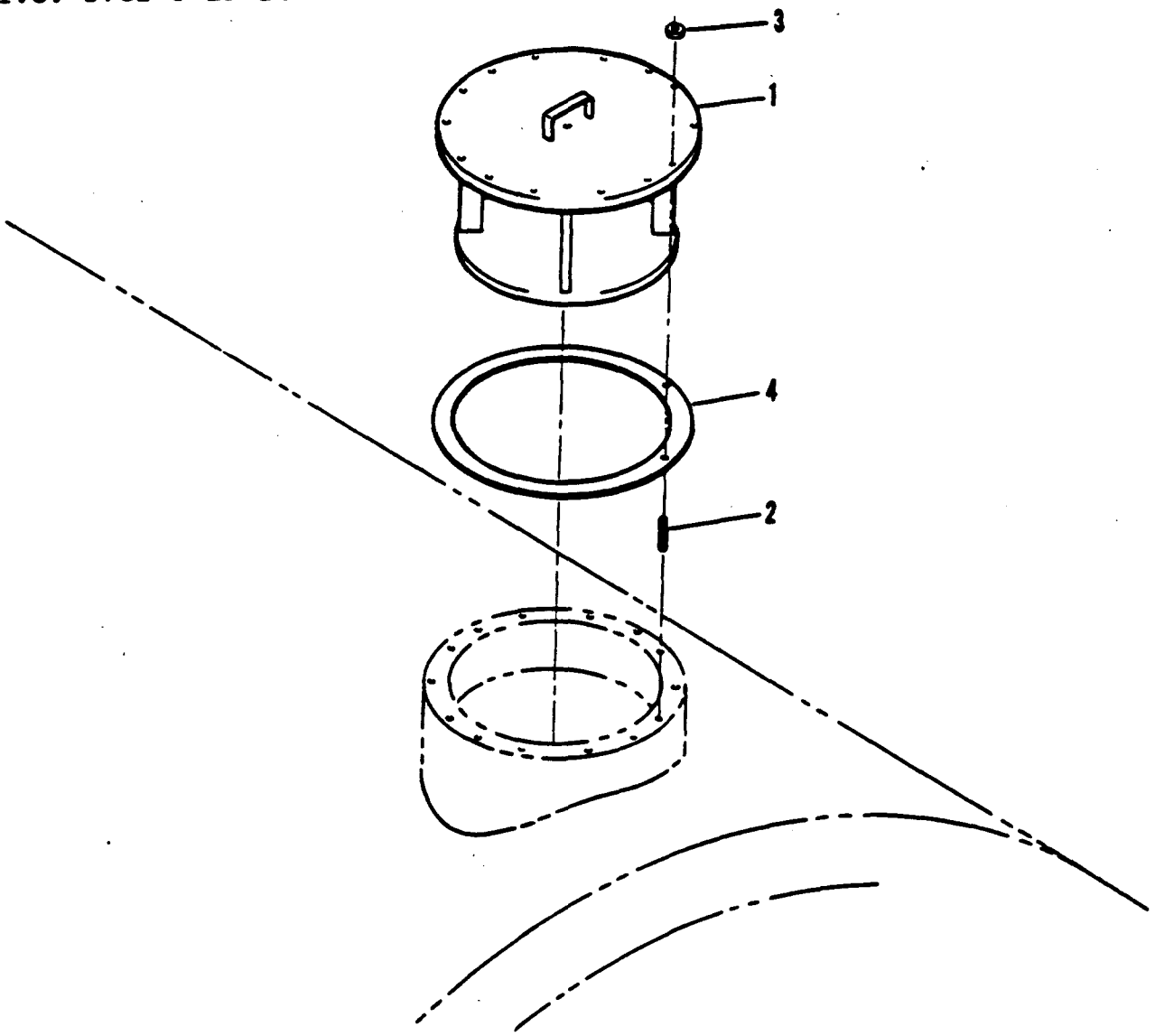

Figure 2-3. Manway Assembly

FIG. & INDEX NO.	PART NO.	FSCM	DESCRIPTION 1 2 3 4 5 6 7	UNITS PER ASSY.	USABLE ON CODE	SMR CODE
3-	79-416		MANWAY ASSEMBLY (See Fig. 1 ..... for NHA)	1		
-1	79-420		.BAFFLE ASSEMBLY.....	1		PAOZZ
			(ATTACHING PARTS)			
-2	NAS1454C8-0600		.STUD, S/S, 1/2-20 NF x 2 IN. Lg.	24		PAOZZ
-3	MS51972-5		.NUT, Hex Hd, 1/2-20, S/S.....	24		PAOZZ
-4	75-28		.GASKET, Manway.....	1		PAOZZ

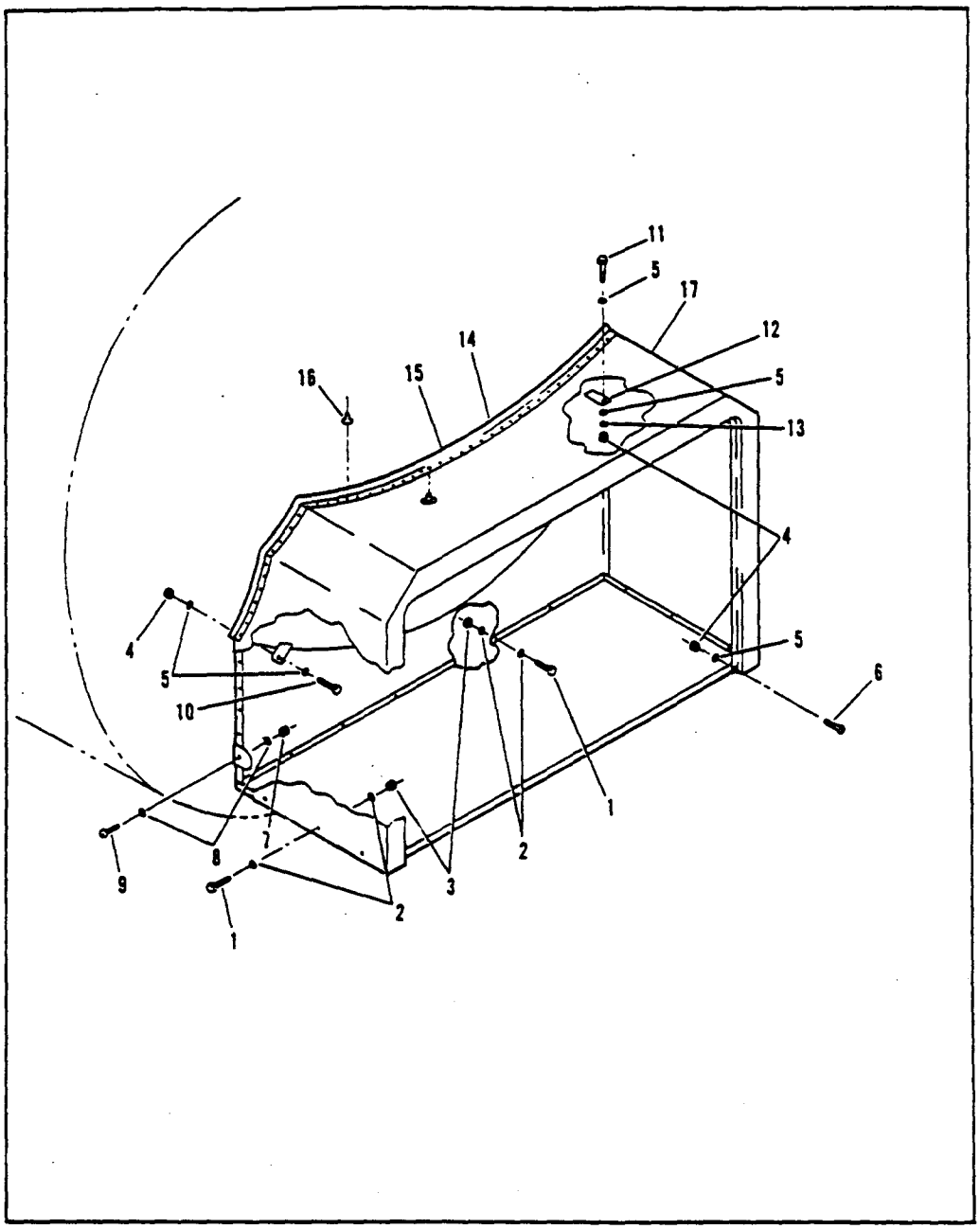

Figure 2-4. Housing, Cabinet

FIG. & INDEX NO.	PART NO.	FSCM	DESCRIPTION 1 2 3 4 5 6 7	UNITS PER ASSY.	USABLE ON CODE	SMR CODE
4-			HOUSING, Cabinet (See Fig. 22.... for NHA)	1		
			(ATTACHING PARTS)			
-1	MS90728-38		.BOLT, Hex Hd. 5/16-18NC, x..... 1-1/2 in. Lg. Cad. Plated	21		PAOZ
-2	AN960-516		.WASHER, Flat S/S, 5/16 in. NOM..	23		PAOZ
-3	MS51943-33		.NUT, Elastic Stop, Cad Plated,.. Steel, 5/16-18 NC	23		PAOZ
-4	MS51943-35		.NUT, Elastic Stop, Cad Plated,.. Steel, 3/8-16 NC	10		PAOZ
-5	AN960-616		.WASHER, Flat, S/S, 3/8 in. NOM..	10		PAOZ
-6	MS51959-113		.SCREW, Machine, Slotted Flathead Cad Plated Steel 3/8-16 NC x 1-1/2 in. Lg.	2		PAOZ
-7	MS51943-31		.NUT, Elastic Stop, Cad Plated... Steel, 1/4-20 NC	34		PAOZ
-8	AN960C416		.WASHER, Flat S/S 1/4 in. NOM....	34		PAOZ
-9	MS35206-285		.SCREW, Machine, Slotted, Rd. Hd. Cad Plated Steel, 1/4-20 NC x 1-1/2 in. Lg.	14		PAOZ
-10	MS18154-58		.BOLT, Hex Hd., Cad Plated Steel. 3/8-16 NC x 3/4 in. Lg.	4		PAOZ
-11	MS90725-62		.BOLT, Hex Hd., Cad Plated Steel. 3/8-16 NC x 1-1/4 in. Lg.	2		PAOZ
-12	AN931B6-10		.GROMMET, Rubber.....	2		PAOZ
-13	I15539-7		.GASKET, Neoprene 2 in. x 2 in. x 1/16 in. Thk (Fabricate using Bulk Stock NSN 5330-00-261-5760)	A/R		PAOZ
-14	I15695-2		.MOULDING, Neoprene, 1/8 in. Thk. x 2 in. W x 180 in. Lg.	1		PAOZ
-15	2216-BA	76381	.SEALER, Clear Amber.....	A/R		PAOZ
-16	AD56BS	07707	.RIVET, Pop.....	96		PAOZ
			---*---			
-17	NO NUMBER		.HOUSING, Fiberglass.....	1		

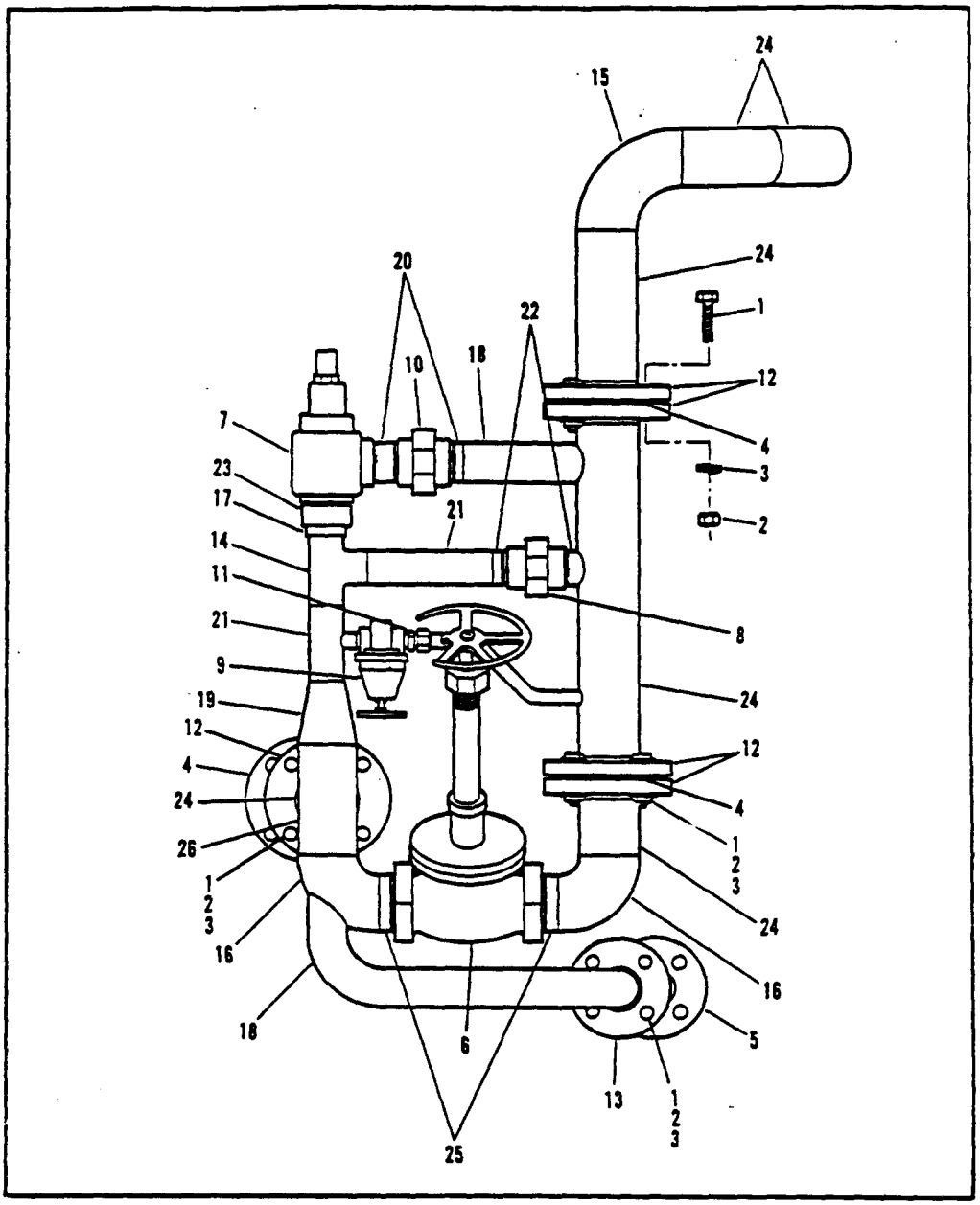

Figure 2-5. Spool Assembly, Vent

FIG. & INDEX NO.	PART NO.	FSCM	DESCRIPTION 1 2 3 4 5 6 7	UNITS PER ASSY.	USABLE ON CODE	SMR CODE
5-	80-424		SPOOL ASSEMBLY, Vent (LC) (See... Fig. 1 for NHA)	1		
			(ATTAHCING PARTS)			
-1	MS35307-40		.BOLT, Hex Hd. S/S, 5/8-11 x..... 3-1/2 in. Lg.	16		PAOZ
-2	MS35690-1010		.NUT, Hex, S/S, 5/8-11 NC.....	16		PAOZ
-3	MS35338-50		.WASHER, Split Loc, S/S, 5/8 NOM.	16		PAOZ
-4	I15749-7		.GASKET, 3 in., 150 lb., Full.... Face Flange, 1/16 in. Thk., Durable	3		PAOZ
-5	I15747-5		.GASKET, 2 in., 150 lb., Full.... Face Flange, 1/16 in. Thk., Durable	1		PAOZ
			---*---			
-6	7K102X64	48422	.VALVE, 3 in. Globe (V-10) (See.. Fig. 19)	1	C	PAOB
	7K102Z64	48422	.VALVE, 3 in. Globe (V-10) (See.. Fig. 19)	1	D	PAOB
-7	508-0113	52659	.VALVE, 2 in. Relief, 55 PSI..... (RV-3)	1		PAOBZ
	8140511-1 *		.DECAL, RV-3 Tank Relief Valve	1		
-8	77-23-011-00	25515	.DISC ASSEMBLY, Burst Head..... Safety Pressure	1		AOO
-9	10673	71342	.VALVE, 1/2 in. Back Pressure.... Regulating, 10-50 PSI (PC-1)	1		PAOBZ
	8044036-01 *	98750	.DECAL, PC-1 Pressure Regulating Valve	1		
-10	2IN36115T304	34646	.UNION, 2 in. S/S Pipe (FPT).....	1		PAOZZ
-11	1210-1-12-316	02570	.CONNECTOR, 3/4 Tube x 3/4 MPT...	1		PAOZZ
-12	I12370-2		.FLANGE, 3 in. S/S, 150 Lb. IPS..	5		PAOZZ
-13	I12360-6		.FLANGE, 2 in. S/S, 150 Lb. IPS..	1		PAOZZ
-14	I12284-7		.TEE, 1-1/2 in. B/W, S/S, Sch. 10	1		PAOZZ
-15	I12208-1		.ELBOW, 3 in. LR, B/W, S/S,..... Sch. 10	1		PAOZZ
-16	I12209-2		.ELBOW, 3 in. SR, B/W, S/S,..... Sch. 10	2		PAOZZ
-17	I12508-7		.PIPE, 2 in. S/S, Sch. 80, PIS x. 5 in. Lg.	1		MOO
-18	I12505-4		.PIPE, 2 in. S/S, Sch 5 PIS.....	2		MOO
-19	I14971-6		.REDUCER, Concentric, 3 x 1-1/2.. in. S/S, B/W, Sch 5	1		PAOZZ
-20	I12246-4		.NIPPLE, 2 in. x 3 in. Lg. S/S... Pipe, Sch. 40	2		PAOZZ

FIG. & INDEX NO.	PART NO.	FSCM	DESCRIPTION 1 2 3 4 5 6 7	UNITS PER ASSY.	USABLE ON CODE	SMR CODE
-21	I12500-6		.PIPE, 1-1/2 in. S/S, Sch 5 IPS.. x 8 in. Lg.	1		MOO
-22	I12243-1		.NIPPLE, 1-1/2 in. IPS x 3 in. .. Lg. Sch. 40, S/S	2		PAOZZN
-23	I12161-3		.COUPLING, 2 in. S/S Pipe, 150... lb. IPS	1		PAOZZN
-24	I12514-6		.PIPE, 3 in. S/S, Sch. 5 IPS.....	6		MOO
-25	I12251-2		.NIPPLE, 3 in. S/S, IPS x 4 in... Lg.	2		PAOZZN
-26	I12293-2		.TEE, 3 in. S/S, IPS, Sch. 10.... Pipe, B/W	1		PAOZZN
			* Requisition Decals in accordance with Chapter 12, AFR-6-1			

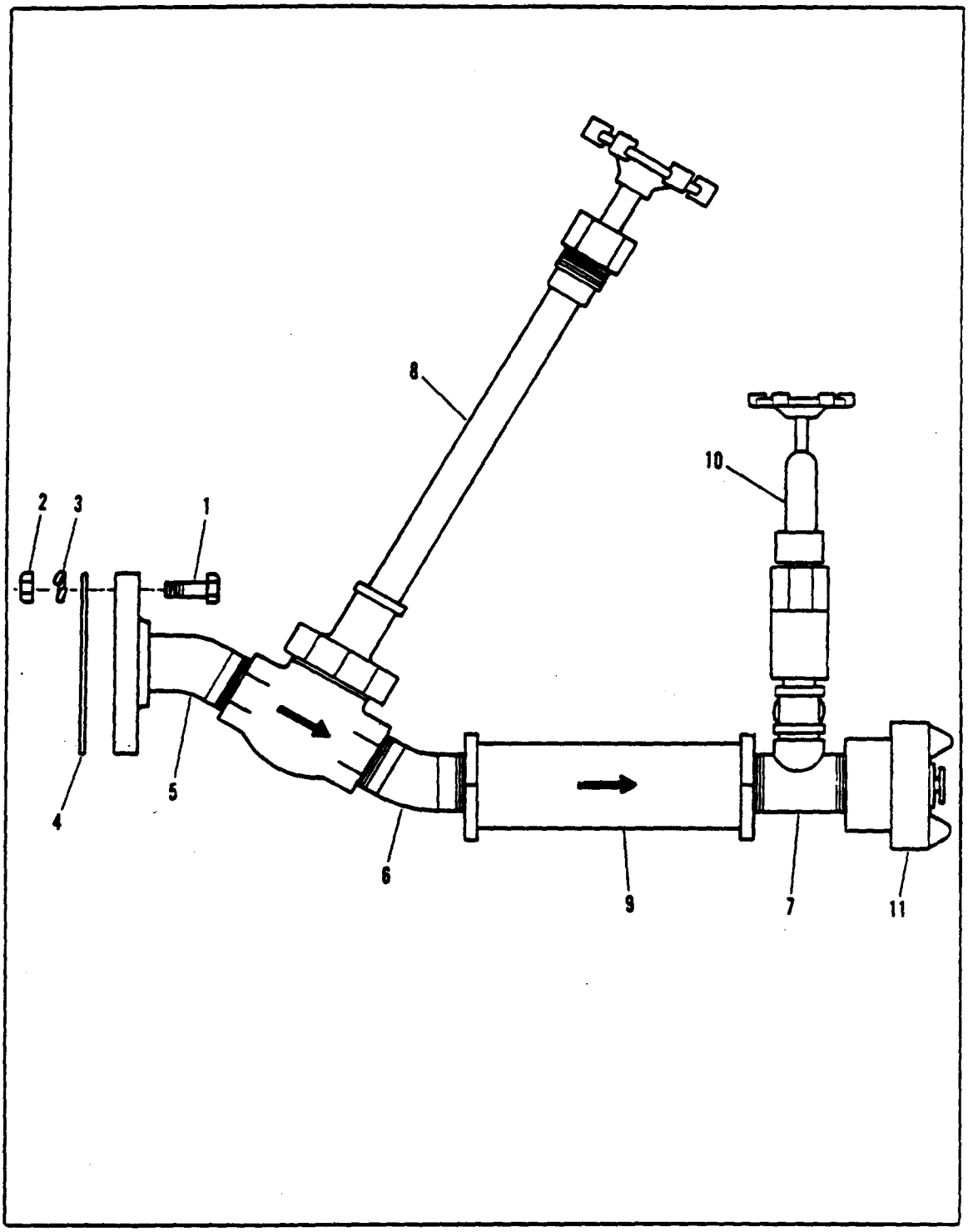

Figure 2-6. Spool Assembly, Service

FIG. & INDEX NO.	PART NO.	FSCM	DESCRIPTION 1 2 3 4 5 6 7	UNITS PER ASSY.	USABLE ON CODE	SMR CODE
6-	80-426		SPOOL ASSEMBLY, Service (LC)..... (See Fig. 1 for NHA)	1		
-1	MS35307-417		.BOLT, Hex Hd., S/S, 1/2-13 x ... 2-1/2 in. Lg.	1		PAOZZN
-2	MS51971-5		.NUT, Hex Hd. 1/2-13 NC.....	4		PAOZZN
-3	MS35338-48		.WASHER, 1/2 in. S/S, Split Lock.	4		PAOZZN
-4	I15745-3		.GASKET, 1 in. Flange, 1/16 in... Thk. Durable	1		PAOZZN
-5	80-426-2		.SPOOL SUB-ASSEMBLY.....	1		PAOZZN
-6	80-426-1		.SPOOL SUB-ASSEMBLY.....	1		PAOZZN
-7	80-426-3		.SPOOL SUB-ASSEMBLY.....	1		PAOZZN
-8	ES1566-088	16750	.VALVE, 1 in. Globe, V-5 (See.... Fig. 17)	1		PAOZZN
-9	211-1214	14818	.FILTER ASSEMBLY, 1 in. (10..... Micron, 25 GPM)	1		PAOZZN
-10	73-107		.SPOOL ASSEMBLY, Relief & Drain.. (See Fig. 15)	1		
-11	8991173	18876	.COUPLING, 1 in. LOX Male (See... Fig. 21)	1		PAOZZN
-12	89911711	18876	.COUPLING, 1 in. LIN Male (See... Fig. 22)	1		PAOZZN

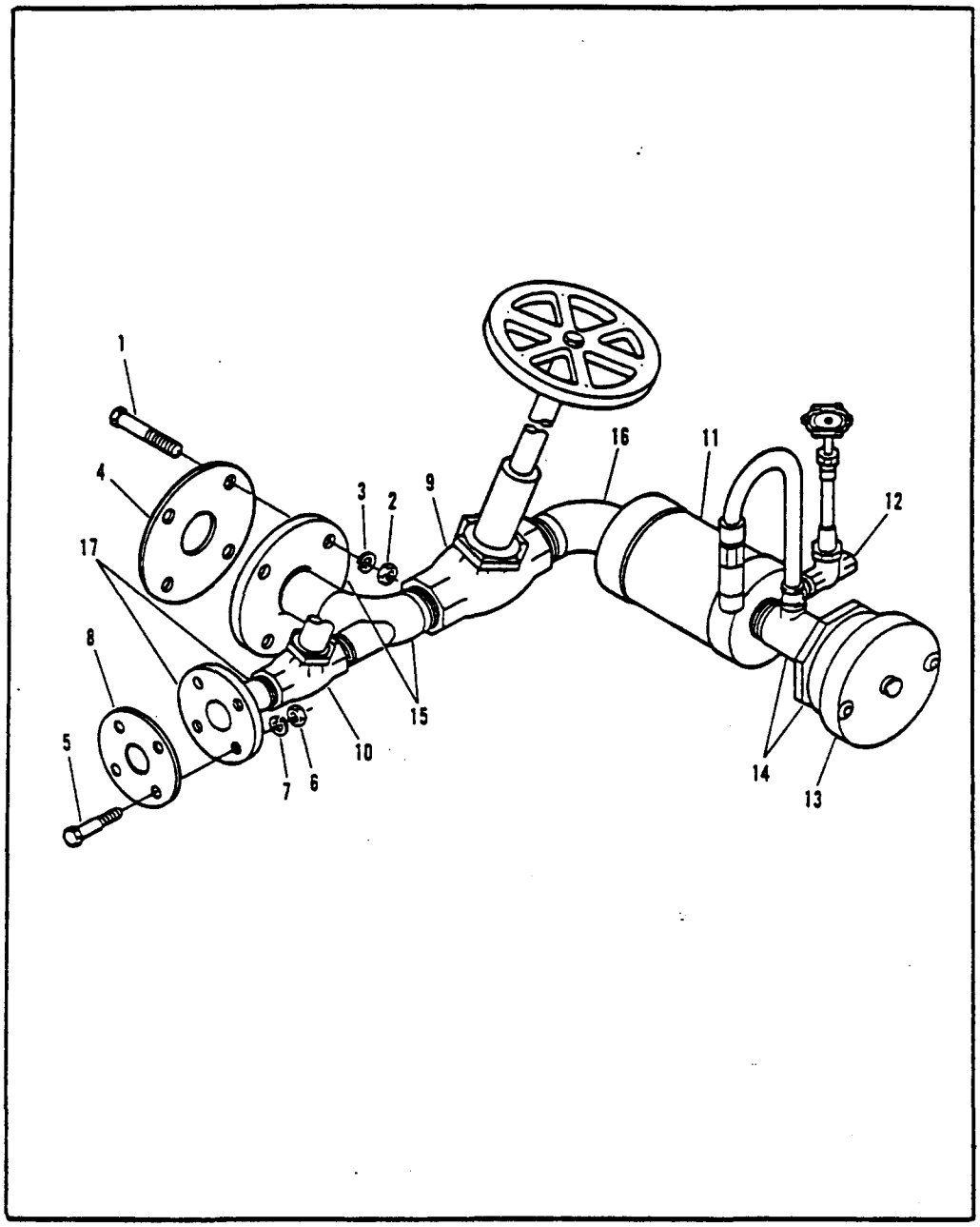

Figure 2-7. Spool Assembly, Fill and Drain

FIG. & INDEX NO.	PART NO.	FSCM	DESCRIPTION 1 2 3 4 5 6 7	UNITS PER ASSY.	USABLE ON CODE	SMR CODE
7-	80-425		SPOOL ASSEMBLY, Fill & Drain..... (LC) (See Fig. 1 for NHA)	1		
			(ATTACHING PARTS)			
-1	MS35307-468		.BOLT, Hex Hd. S/S, 5/8-11 NC x 3 in. Lg.	4		PAOZZN
-2	MS35690-1010		.NUT, Hex, S/S, 5/8-11 NC.....	4		PAOZZN
-3	MS35338-50		.WASHER, 5/8 in. NOM, Split Lock. S/S	4		PAOZZN
-4	I15747-5		.GASKET, 2 in. Flange, 150 lb.... Face, 1/16 in. Thk, Durable	1		PAOZZN
-5	MS35307-417		.BOLT, Hex Hd. S/S, 1/2-13 NC x.. 2-1/2 in. Lg.	4		PAOZZN
-6	MS51971-5		.NUT, Hex, S/S, 1/2-13 NC.....	4		PAOZZN
-7	MS35338-48		.WASHER, 1/2 in. NOM, Split Lock. S/S	4		PAOZZN
-8	I15745-3		.GASKET, 1 in. Flange, 150 lb.... Flat Face, 1/16 in. Thk. Durable	1		PAOZZN
-9	ES1566-816	16750	.VALVE ASSEMBLY, 2 in. Globe..... (V-8) (See Fig. 18)	1		PAOBZN
-10	ES1566-088	16750	.VALVE ASSEMBLY, 1 in. Globe..... (V-9) (See Fig. 17)	1		PAOBZN
-11	101844	14487	.FILTER ASSEMBLY, 2 in.....	1		PAOZZN
-12	73-107		.SPOOL ASSEMBLY, Relief & Drain.. (See Fig. 15)	1		
-13	55043-35-002	00255	.COUPLING ASSEMBLY, 3-1/2 in..... LOX (See Fig. 21)	1	A	PAOZZN
	8991180	00255	.COUPLING ASSEMBLY, 3-1/2 in..... LOX (See Fig. 21)	1	A	PAOZZN
-14	80-425-4		.SPOOL SUB-ASSEMBLY.....	1		PAOZZN
-15	80-425-3		.SPOOL SUB-ASSEMBLY.....	1		PAOZZN
-16	80-425-2		.ELBOW, 2 in. S/S Pipe, 90°..... (Special)	1		PAOZZN
-17	80-425-1		.SPOOL SUB-ASSEMBLY.....	1		PAOZZN

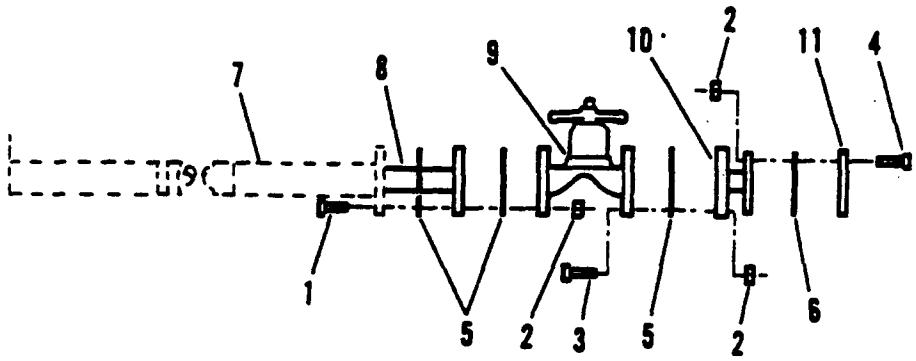

Figure 2-8. Spool Assembly, Vacuum Line with Filter

FIG. & INDEX NO.	PART NO.	FSCM	DESCRIPTION 1 2 3 4 5 6 7	UNITS PER ASSY.	USABLE ON CODE	SMR CODE
8-	79-414-1-4		SPOOL ASSEMBLY, Vacuum Line..... w/ Filter (See Fig. 1 for NHA) (ATTAHCING PARTS)	1		
-1	MS35307-467		.BOLT, Hex Hd., 5/8-11 NC x ..... 2-3/4 in. Lg. S/S	4		PAOZZ
-2	MS51967-20		.NUT, 5/8-11 NC, Elastic Stop,... Cad Plated Steel	10		PAOZZ
-3	MS35291-163		.BOLT, Hex Hd. 5/8-11 NC x ..... 1-3/4 in. Lg. C/S	4		PAOZZ
-4	MS35291-162		.BOLT, Hex Hd. 5/8-11 NC x..... 1-1/2 in. Lg. C/S	2		PAOZZ
-5	I16175-6		.GASKET, 2 in. Flange, Flat Face. 150 lb., 1/16 in. Thk. Neoprene (Fabricate Using Bulk Stock NSN 5330-00-261-5760)	3		PAOZZ
-6	2-328V747-75	02697	.PACKING, Preformed.....	1		PAOZZ
-7	80-114		.FILTER ASSEMBLY, Outer, (Weld... to Tank)	1		PAOZZ
-8	80-113		.FILTER ASSEMBLY, Inner.....	1		PAOZZ
-9	2431-2T-2IN	54578	.VALVE ASSEMBLY, 2 in. Diaphragm. (V-1)	1		PAOBZ
	8140508-01	98750	.DECAL, V-1 Tank Evacuation Valve (Requisition in accordance with Chapter 12, AFR 6-1)	1		PAOZZ PAOZZ
-10	80-122		.FLANGE ASSEMBLY.....	1		
-11	80-123		.FLANGE, Blind.....	1		

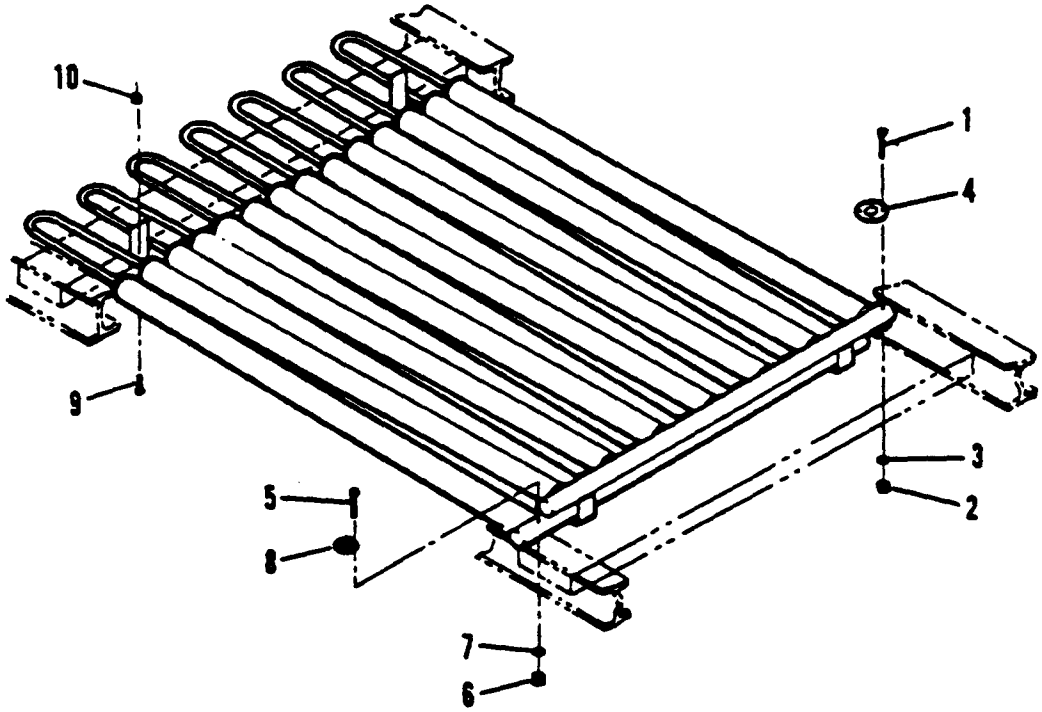

Figure 2-9. Coil Assembly, Pressure Buil-Up

FIG. & INDEX NO.	PART NO.	FSCM	DESCRIPTION 1 2 3 4 5 6 7	UNITS PER ASSY.	USABLE ON CODE	SMR CODE
9-	80-349		COIL ASSEMBLY, Pressure Buildup.. (LC) (See Fig. 1 for NHA)	1		
			(ATTACHING PARTS)			
-1	MS35307-468		.BOLT, Hex Hd. S/S, 5/8-11 NC x.. 3 in. Lg.	4		PAOZZN
-2	MS35690-1010		.NUT, Hex. S/S, 5/8-11 NC.....	4		PAOZZN
-3	MS35338-50		.WASHER, 5/8 in. Split Lock, S/S.	4		PAOZZN
-4	I15747-5		.GASKET, 2 in. Flange, Flat Face. 150 lb., 1/16 in. Thk. Durable	1		PAOZZN
-5	MS35307-417		.BOLT, Hex Hd. 1/2-13 NC x 2-1/2. in. Lg. S/S	4		PAOZZN
-6	MS51971-5		.NUT, Hex 1/2-13 NC, S/S.....	4		PAOZZN
-7	MS35338-48		.WASHER, 1/2 in. Split Lock, S/S.	4		PAOZZN
-8	I15745-3		.GASKET, 1 in. Flange, Flat Face. 150 lb. 1/16 in. Thk. Durable	1		PAOZZN
-9	MS35307-358		.BOLT, Hex Hd. S/S, 3/8-16 NC x.. 3/4 in. Lg.	4		PAOZZN
-10	MS51943-35		.NUT, Hex S/S, 3/8-16 NC, Elastic Stop	4		PAOZZN

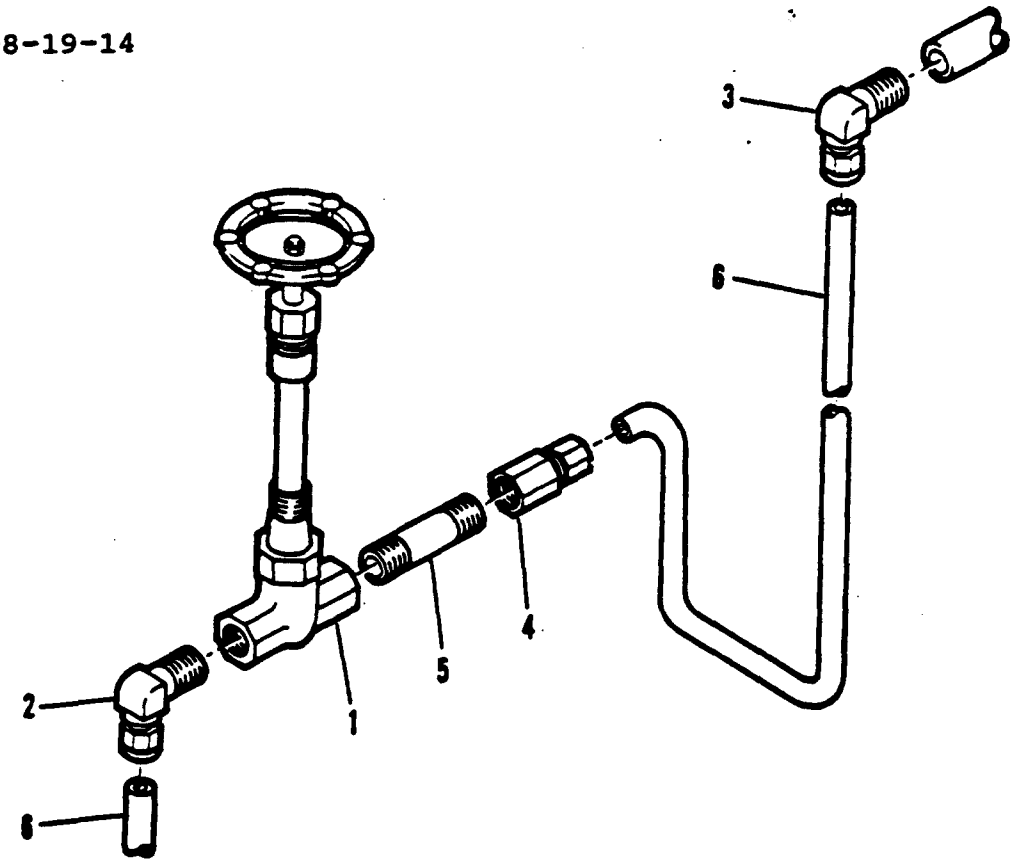

Figure 2-10. Spool Assembly, Full Trycock

FIG. & INDEX NO.	PART NO.	FSCM	DESCRIPTION 1 2 3 4 5 6 7	UNITS PER ASSY.	USABLE ON CODE	SMR CODE
10-	80-336		SPOOL ASSEMBLY, Full Trycock..... (See Fig. 1 for NHA)	1		
-1	80-340-15	26984	.VALVE ASSEMBLY, 3/8 in. IPS..... Globe (See Fig. 16)	1		PAOB
	7K102X485	48422	.VALVE ASSEMBLY, 3/8 in. IPS..... Globe (See Fig. 16)	1		PAOB
-2	600-2-4-315	02570	.ELBOW, 3/8 in. Tube x 1/4 in.... MPT	1		PAOZ
-3	600-2-6-316	02570	.ELBOW, 3/8 in. Tube x 3/8 in.... MPT	1		PAOZ
-4	600-7-6-316	02570	.CONNECTOR, 3/8 in. Tube x 3/8... in. FPT	1		PAOZ
-5	7210100P1	24446	.NIPPLE, Sch. 40 Pipe, 3/8 x 2... in. Lg.	1		PAOZ
-6	I12723-5		.TUBE, S/S, 3/8 in. OD., .049.... Wall	1		MOO

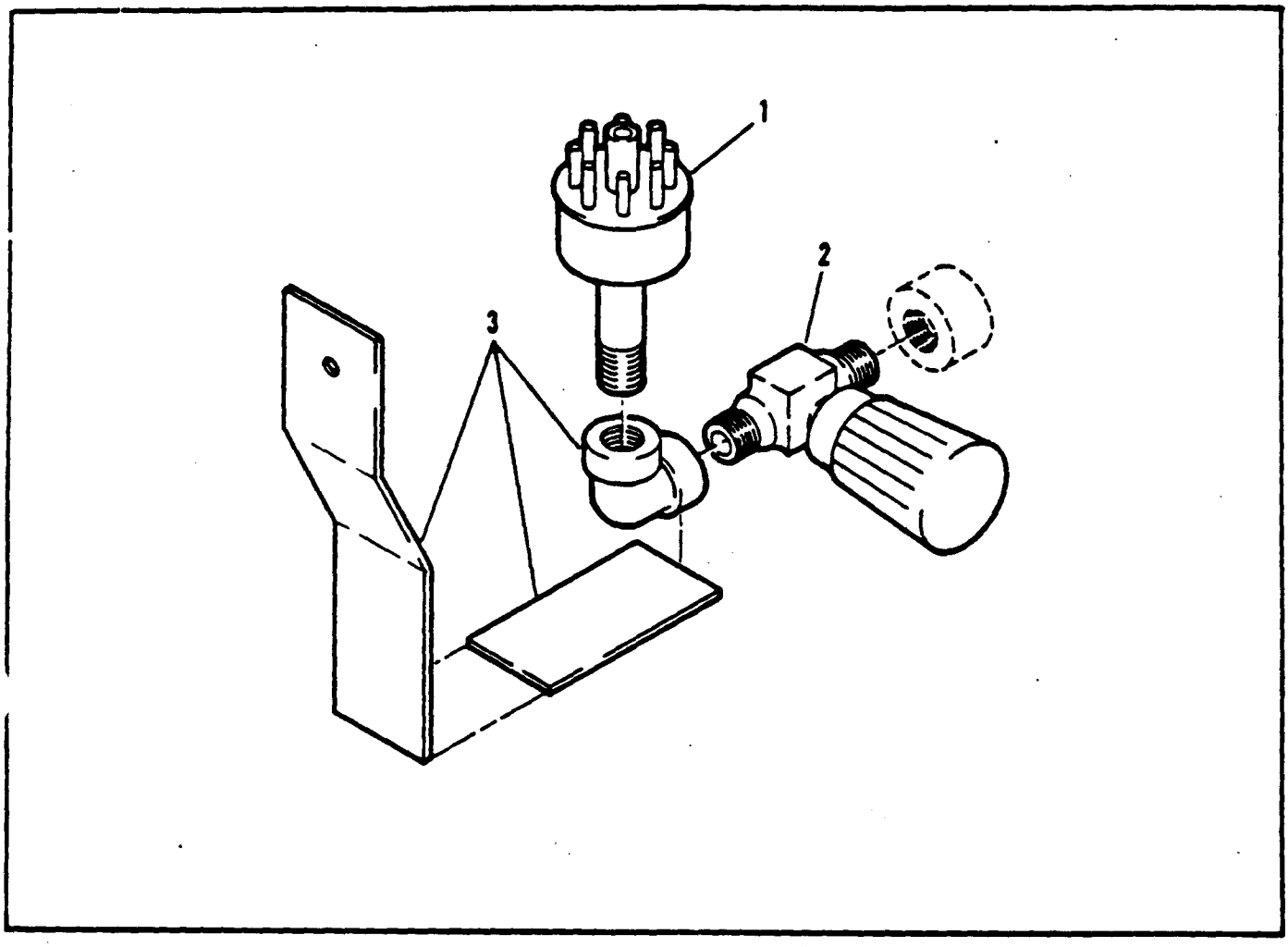

Figure 2-11. Thermocouple Assembly

FIG. & INDEX NO.	PART NO.	FSCM	DESCRIPTION 1 2 3 4 5 6 7	UNITS PER ASSY.	USABLE ON CODE	SMR CODE
11-	70-302-2-7		THERMOCOUPLE ASSEMBLY (See Fig... 1 for NHA)	1		
-1	TVT-1504	54839	.TUBE, Thermocouple.....	1		PAOZZN
-2	4171M2B	28968	.VALVE ASSEMBLY, 1/8 in..... Diaphragm (V-4)	1		PAOZZN
	8221308-01	98750	.DECAL, Thermocouple Valve..... Identification (Requisition in accordance with AFR 6-1, Chapter 12)	1		
-3	70-302-3-2-7		.ELBOW & BRACKET ASSEMBLY..... (Welded Assembly)	1		PAOZZN

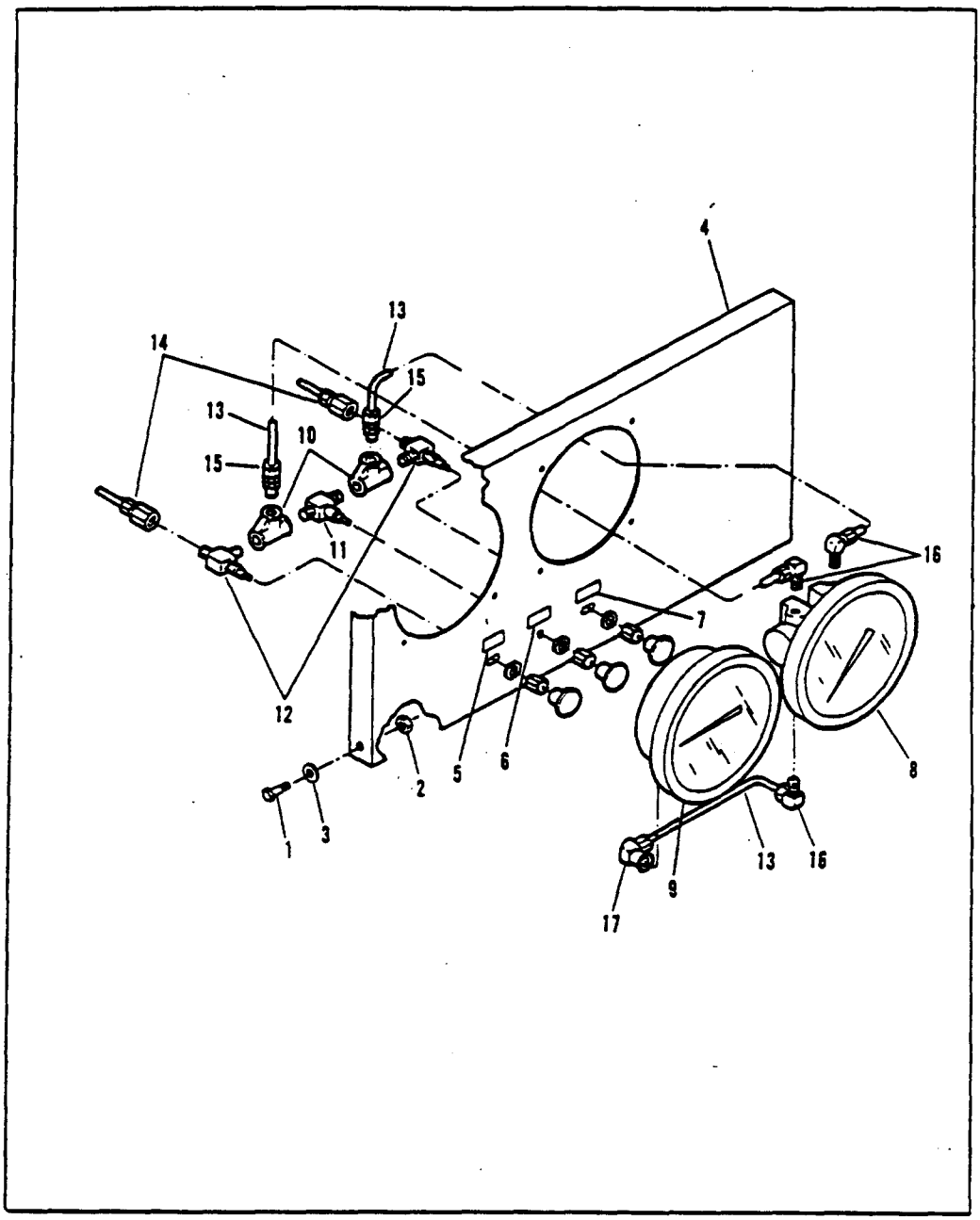

Figure 2-12. Panel Assembly, Instrument

FIG. & INDEX NO.	PART NO.	FSCM	DESCRIPTION 1 2 3 4 5 6 7	UNITS PER ASSY.	USABLE ON CODE	SMR CODE
12-	73-288		PANEL ASSEMBLY, Instrument (See.. Fig. 1 for NHA)	1		
			(ATTACHING PARTS)			
-1	MS35307-308		.BOLT, Hex Hd. S/S, 1/4-20 NC x.. 1 in. Lg.	4		PAOZZN
-2	MS51943-31		.NUT, Hex, S/S, 1/4-20 NC,..... Elastic Stop	4		PAOZZN
-3	AN960C416		.WASHER, 1/4 in. NOM Flat, S/S...	4		PAOZZN
-4	80-488		.PANEL, Instrument (Scotchal..... Photosensitive Metal Facing)	1		MOO
-5	8140506-01	*98750	.DECAL, Isolation Valve (V-11)...	1		
-6	8140505-01	*98750	.DECAL, Balancing Valve (V-3)....	1		
-7	8140507-01	*98750	.DECAL, Isolation Valve (V-12)...	1		
-8	I16084-6	26984	.GAUGE, Liquid Level (LL-1)..... (LC) (Alt. P/N 227-T7297)	1		PAOZZN
	8518589-01	*98750	.DECAL, LOX/LIN/GAUGE (Install... decal on P/N I16084-6)	1		PAOZZN
-9	367-B	73475	.GAUGE, Pressure, 0-100 PSI,..... (PI-1) 6 in. Dial, (LC)	1		PAOZZN
	8140503-01	*98750	.DECAL, PI-1, Pressure Gauge ID..	1		PAOZZN
-10	1-4MMOSS	30780	.TEE, Pipe, 1/4 in. S/S Female...	2		PAOZZN
-11	B-1VM4	12623	.VALVE ASSEMBLY, 1/4 in. Globe... (V-3)	1		PAOZZN
-12	B1VM4A	12623	.VALVE ASSEMBLY, 1/4 in. Angle... (V-11 and V-12)	2		PAOZZN
-13	I12722-4		.TUBE, S/S, 1/4 in. OD x .035.... Wall (Fabricate Using Bulk Stock NSN 4710-00-985-0734)	A/R		MOO
-14	400-7-4-316	02570	.CONNECTOR, Straight, 1/4 in. OD. x 1/4 in. FPT	2		PAOZZN
-15	400-1-4-316	02570	.CONNECTOR, Straight, 1/4 in. OD. x 1/4 in. MPT	2		PAOZZN
-16	400-2-4-316	02570	.CONNECTOR, 90°, 1/4 in. OD. x... 1/4 in. MPT	3		PAOZZN
-17	400-8-4-316	02570	.CONNECTOR, 90°, 1/4 in. OD. x... 1/4 in. FPT	1		PAOZZN
			* Requisition Decals in accordance with AFR 6-1, Chapter 12			

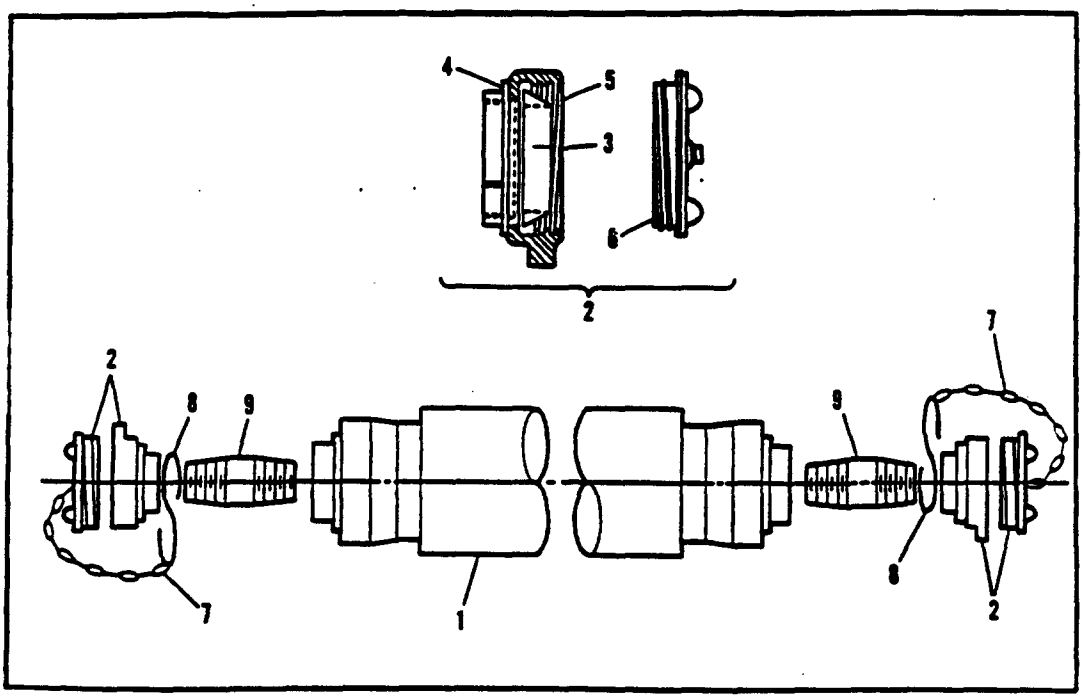

Figure 2-13. Hose Assembly, 1 Inch Lox

FIG. & INDEX NO.	PART NO.	FSCM	DESCRIPTION 1 2 3 4 5 6 7	UNITS PER ASSY.	USABLE ON CODE	SMR CODE
13-	NO NUMBER	98750	HOSE ASSEMBLY, 1 in. LOX..... Transfer (See Fig. 1 for NHA)	REF		
-1	59C6671-2-10	98750	.HOSE, 1 in. ID x 10 Ft. Lg. (LC)	1		PAOZZ
-2	8991174	18876	.COUPLING ASSEMBLY, 1 in. ..... Female (LC)	2	A	PAOZZ
	8991172	18876	.COUPLING ASSEMBLY, 1 in. ..... Female (LC)	2	B	PAOZZ
-3	8987856	18876	..CONE, Coupling.....	1	A	PAOZZ
	8987877	18876	..CONE, Coupling.....	1	B	PAOZZ
-4	8987840	18876	..RING, Coupling.....	1	A	PAOZZ
	8998740	18876	..RING, Coupling.....	1	B	PAOZZ
-5	8987857	18876	..NUT, Coupling.....	1	A	PAOZZ
	8987878	18876	..NUT, Coupling.....	1	B	PAOZZ
-6	8987870	18876	..PLUG, Coupling.....	1	A	PAOZZ
	8987891	18876	..PLUG, Coupling.....	1	B	PAOZZ
			(ATTACHING PARTS)			
-7	8034683	18876	.CHAIN, Brass, 12 in. Lg..... (Fabricate Using NSN 4040-00-228-9964)	2		PAOZZ
-8	MS87006-83		.HOOK, S.....	2		PAOZZ
-9	AN911-8		.NIPPLE, 1 in. Pipe (LC).....	2		PAOZZ

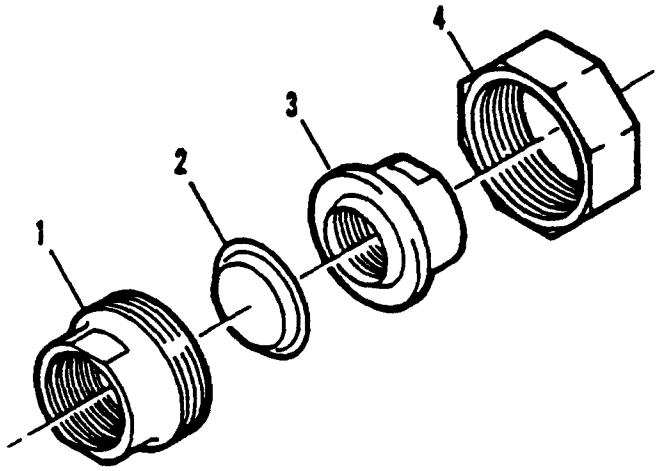

Figure 2-14. Head, Safety Pressure

FIG. & INDEX NO.	PART NO.	FSCM	DESCRIPTION 1 2 3 4 5 6 7	UNITS PER ASSY.	USABLE ON CODE	SMR CODE
14-	77-23-0011-00	25515	HEAD, Safety Pressure (See Fig. 4 for NHA)	1		AOO
-1	77-23-0310-17	25515	.UNION, Threaded Half.....	1		PAOZZN
-2	77-37-0028-65	25515	.DISC, Burst, 84 PSI.....	1		PAOZZN
-3	77-23-0310-17	25515	.UNION, Tailpiece.....	1		PAOZZN
-4	77-23-0310-17	25515	.UNION, Ring.....	1		PAOZZN

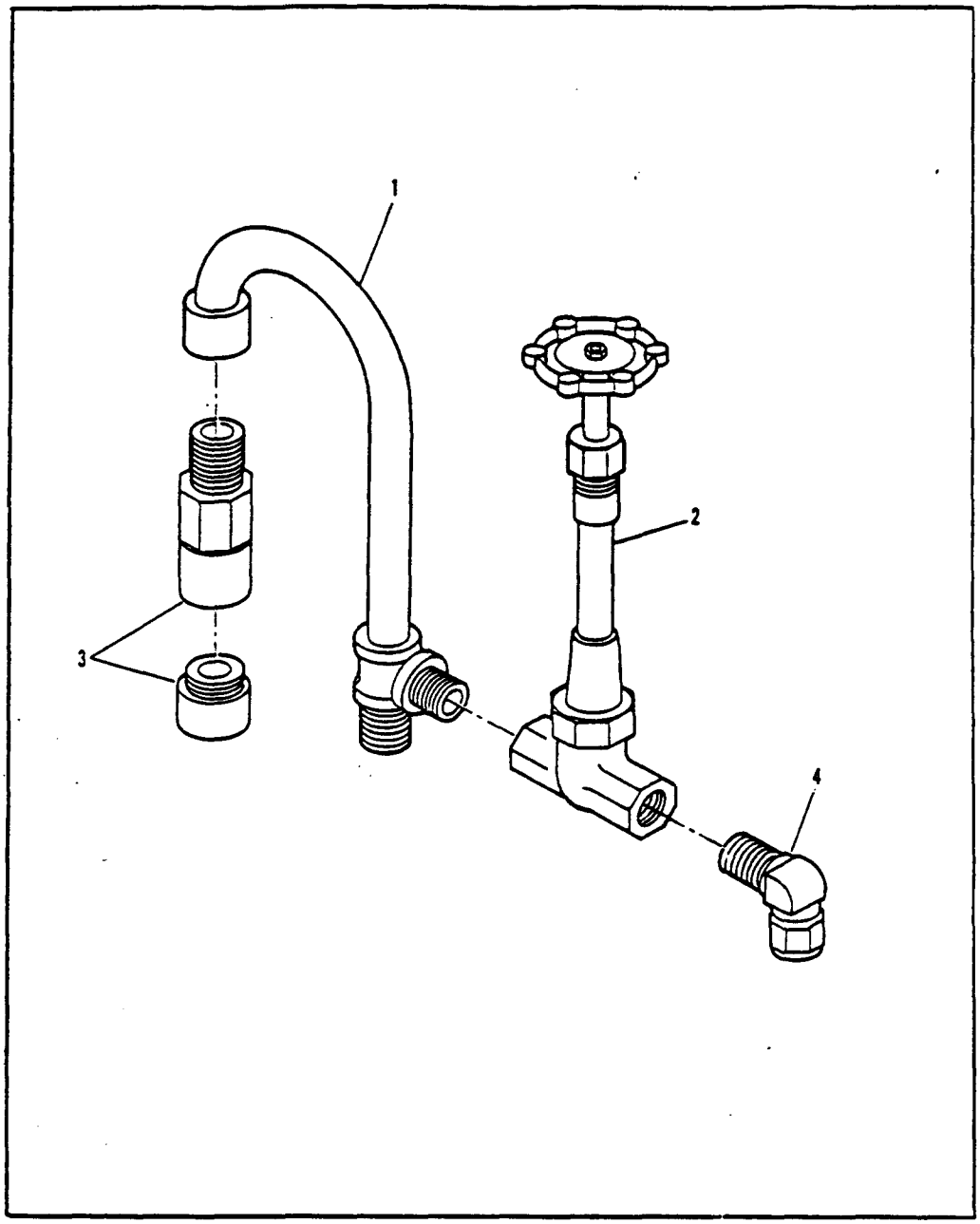

Figure 2-15. Spool Assembly, Relief and Drain

FIG. & INDEX NO.	PART NO.	FSCM	DESCRIPTION 1 2 3 4 5 6 7	UNITS PER ASSY.	USABLE ON CODE	SMR CODE
15-	73-107		SPOOL ASSEMBLY, Relief & Drain... (See Fig. 6 & 7 for NHA)	2		
-1	73-107-1		.BLEED HOSE ASSEMBLY.....	1		AOO
-2	7K0102RLEC-6	26984	.VALVE ASSEMBLY, 3/8 in. Globe... (V-6) (See Fig. 16)	1	C	PAOBZN
	80-425-6	48422	.VALVE ASSEMBLY, 3/8 in. Globe... (V-7) (See Fig. 16)	1	D	
-3	B-9434-N-RV1	06234	.VALVE, Safety Relief, 100 PSI... (RV-1)	1		PAOZZN
	8140509-01 *	98750	.DECAL, RV-1 Service Relief Valve	1		
	B-9434-N-RV-2	06234	.VALVE, Safety Relief, 100 PSI... (RV-2)	1		
	8140510-01 *	98750	.DECAL, RV-2 Fill Relief Valve...	1		
-4	600-2-6-316 *	02578	.ELBOW, 90, 3/8 in. MPT x 3/8 in. Tube	1		PAOZZN
			* Requisition Decals in accordance with AFR 6-1, Chapter 12			

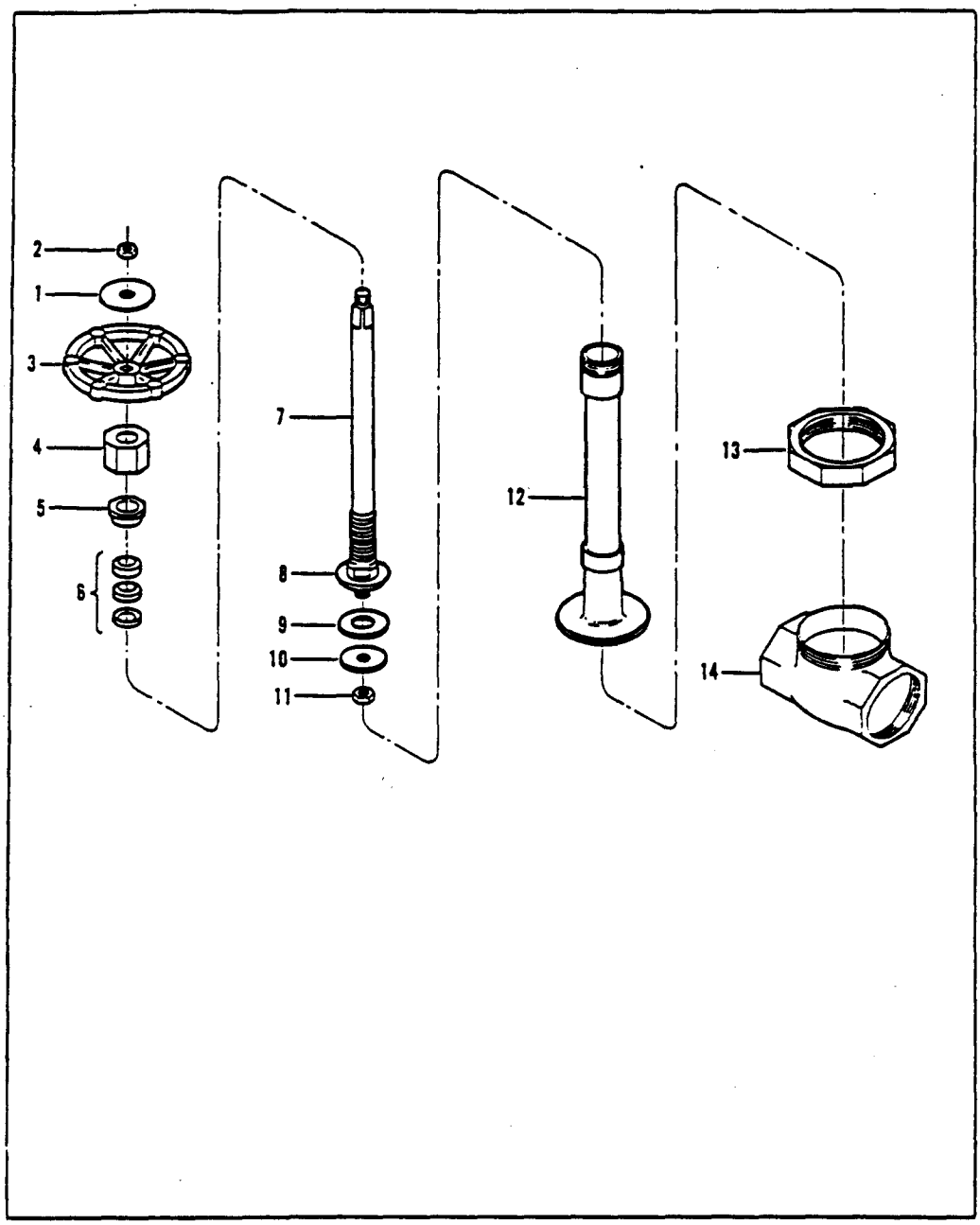

Figure 2-16. Valve Assembly, 3/8 Inch Globe

FIG. & INDEX NO.	PART NO.	FSCM	DESCRIPTION 1 2 3 4 5 6 7	UNITS PER ASSY.	USABLE ON CODE	SMR CODE
16-	80-340-15	48422	VALVE ASSEMBLY, 3/8 in. Globe.... (V-2) (See Fig. 10 for NHA)	1	C	
	7K102X48	48422	VALVE ASSEMBLY, 3/8 in. Globe.... (V-2) (See Fig. 10 for NHA)	1	D	
	80-340-15	48422	VALVE ASSEMBLY, 3/8 in. Globe.... (V-6) (See Fig. 16 for NHA)	1	C	
	7K102X48	48422	VALVE ASSEMBLY, 3/8 in. Globe.... (V-6) (See Fig. 16 for NHA)	1	D	
	80-340-15	48422	VALVE ASSEMBLY, 3/8 in. Globe.... (V-7) (See Fig. 15 for NHA)	1	C	
	7K102X48	48422	VALVE ASSEMBLY, 3/8 in. Globe.... (V-7) (See Fig. 15 for NHA)	1	D	
-1	8140515-01	34351	.DECAL, Valve Identification..... (V-2)	1		
	8140516-01	34351	.DECAL, Valve Identification..... (V-6)	1		
	8140517-01	34351	.DECAL, Valve Identification..... (V-7)	1		
-2	30019110200000		.NUT, Handwheel.....	1		PAOZZN
-3	1E514606900000		.HANDWHEEL, Valve.....	1		PAOZZN
-4	1F356480200000		.NUT, Packing.....	1		
-5	1F299810200000		.GLAND, Packing.....	1		PAOZZN
-6	30093043760000	48422	.PACKING SET, Teflon.....	1		PAOZZN
-7	1F403040690000		.STEM, Valve.....	1		
-8	1F629510690000	48422	.DISC HOLDER.....	1		PAOZZN
-9	30086722690000	48422	.DISC, Valve Insert.....	1		PAOZZN
-10	10086820200000	48422	.DISC, Valve Plate.....	1		PAOZZN
-11	1F607210690000	48422	.NUT, Plain Hex.....	1		PAOZZN
-12	1F402620870000		.BONNET, Valve.....	1		
-13	1F402690870000		.RING, Bonnet.....	1		PAOZZN
-14	11185650870000		.BODY, Valve.....	1		
			* Requisition Decals in accordance with AFR 6-1, Chapter 12			

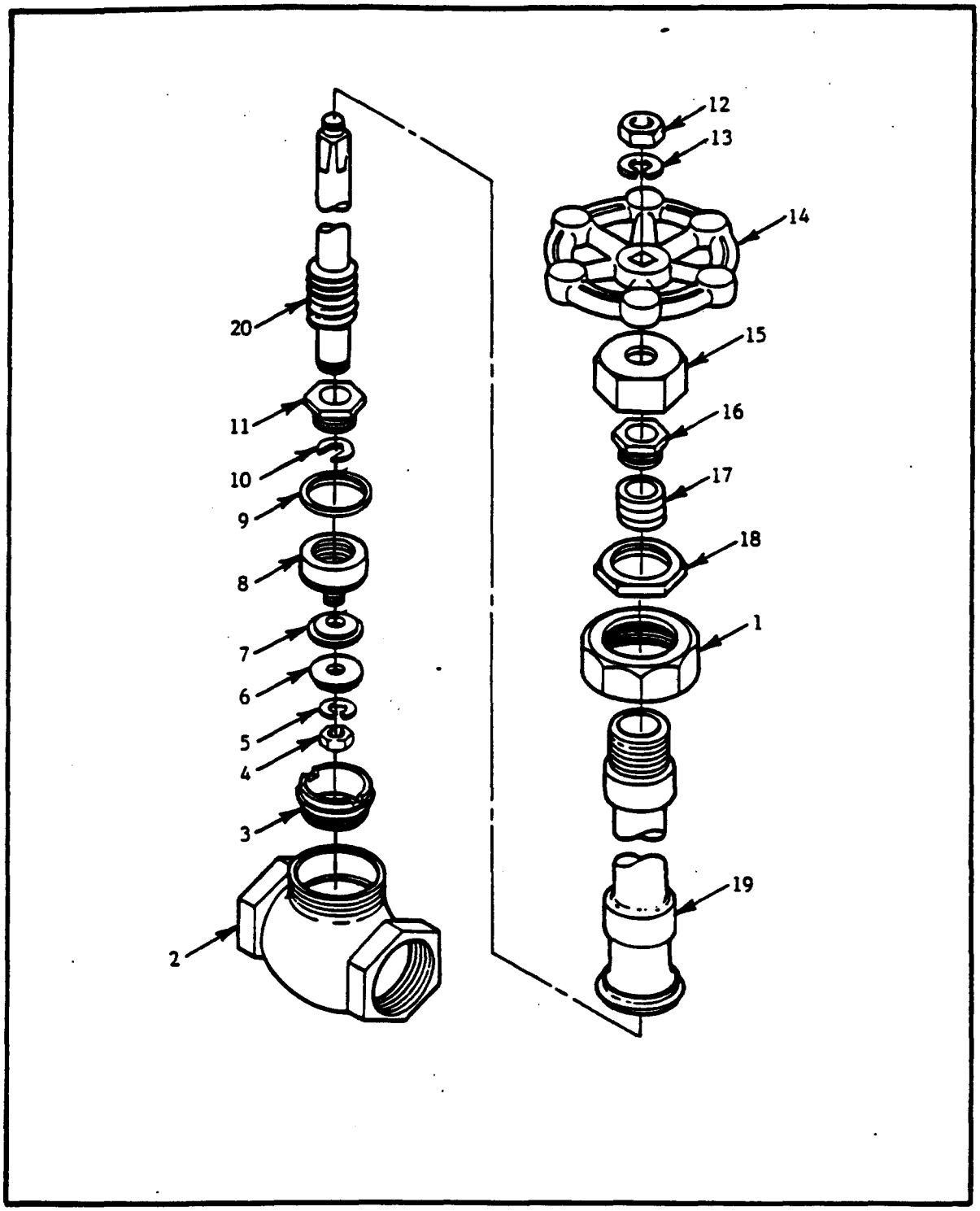

Figure 2-17. Valve Assembly, 1 Inch Globe

FIG. & INDEX NO.	PART NO.	FSCM	DESCRIPTION 1 2 3 4 5 6 7	UNITS PER ASSY.	USABLE ON CODE	SMR CODE
17-	7K10102RELC-1	48422	VALVE ASSEMBLY, 1 in. Globe..... (V-5) (See Fig. 6 for NHA)	1	C	PAOBZN
	ES1566-088	16750	VALVE ASSEMBLY, 1 in. Globe..... (V-5) (See Fig. 6 for NHA)	1	D	PAOBZN
	80-425-5	16750	VALVE ASSEMBLY, 1 in. Globe..... (V-9) (See Fig. 7 for NHA)	1	C	PAOBZN
	ES1566-088	16750	VALVE ASSEMBLY, 1 in. Globe..... (V-9) (See Fig. 7 for NHA)	1	D	PAOBZN
	8140518-01	34351	.DECAL, Valve Identification..... (V-5) (Requisition in accordance with AFR 6-1, Chapter 12)	1		
	8140519-01	34351	.DECAL, Valve Identification..... (V-9) (Requisition in accordance with AFR 6-1, Chapter 12)	1		
-1	1566-088-10	16750	.NUT, Bonnet, 1 in. Valve, BRZ...	1	D	XBO
-2	1566-088-13	16750	.BODY, 1 in. Valve, BRZ.....	1	D	XAO
	D-57925	16750	.BODY, 1 in. Valve, BRZ.....	1	C	XAO
-3	1566-088-2-03	16750	.SEAT RING, 1 in. Valve BRZ.....	1	D	XBO
-4	1566-088-2-05	16750	.DISC NUT, 1 in. Valve BRZ.....	1	D	XBO
-5	1566-088-2-04	16750	.LOCK WASHER, 1 in. Valve BRZ....	1	D	XBO
-6	1566-088-2-02	16750	.DISC RETAINER, 1 in. Valve BRZ..	1	D	XBO
-7	1566-088-2-01	16750	.DISC INSERT, 1 in. Valve KEL-F..	1	D	PAOZZN
	08980	16750	.DISC INSERT, 1 in. Valve KEL-F..	1	C	PAOZZN
-8	1566-088-2-06	16750	.DISC HOLDER, 1 in. Valve BRZ....	1	D	XBO
	F-62954	16750	.DISC HOLDER, 1 in. Valve BRZ....	1	C	XBO
-9	1566-088-14	16750	.LOCK NUT RETAINER, 1 in. Valve..	1	D	XBO
-10	1566-088-15	16750	.RING, Horseshoe, 1 in. Valve....	1	D	XBO
-11	1566-088-12	16750	.DISC LOCK NUT, 1 in. Valve BRZ..	1	D	XBO
-12	1566-088-3	16750	.NUT, Handwheel, 1 in. Valve BRS.	1	D	XBO
	F-8653	16750	.NUT, Handwheel, 1 in. Valve BRS.	1	C	XBO
-13	1566-088-11	16750	.LOCK WASHER, 1 in. Valve.....	1	D	XBO
-14	1566-088-4	16750	.HANDWHEEL, 1 in. Valve.....	1	D	PAOZZN
	E-5150	16750	.HANDWHEEL, 1 in. Valve.....	1	C	PAOZZN
-15	1566-088-5	16750	.PACKING NUT, 1 in. Valve BRS....	1	D	XBO
	F-33918	16750	.PACKING NUT, 1 in. Valve BRS....	1	C	XBO
-16	1566-088-7	16750	.PACKING GLAND, 1 in. Valve BRS..	1	D	XBO
	F-63605	16750	.PACKING GLAND, 1 in. Valve BRS..	1	C	XBO
-17	1566-088-9	16750	.PACKING, 1 in. Valve Teflon.....	1	D	XBO
	09309BM73679	16750	.PACKING, 1 in. Valve Teflon.....	1	C	XBO
-18	1566-088-8	16750	.LOCK NUT, 1 in. Valve BRS.....	1	D	XBO
-19	1566-088-6	16750	.BONNET ASSEMBLY, 1 in. Valve....	1	D	XAO
	E-66890	16750	.BONNET ASSEMBLY, 1 in. Valve....	1	C	XAO
-20	1566-088-1	16750	.STEM ASSEMBLY, 1 in. Valve BRZ..	1	D	XAO
	F-64235	16750	.STEM ASSEMBLY, 1 in. Valve BRZ..	1	C	XAO

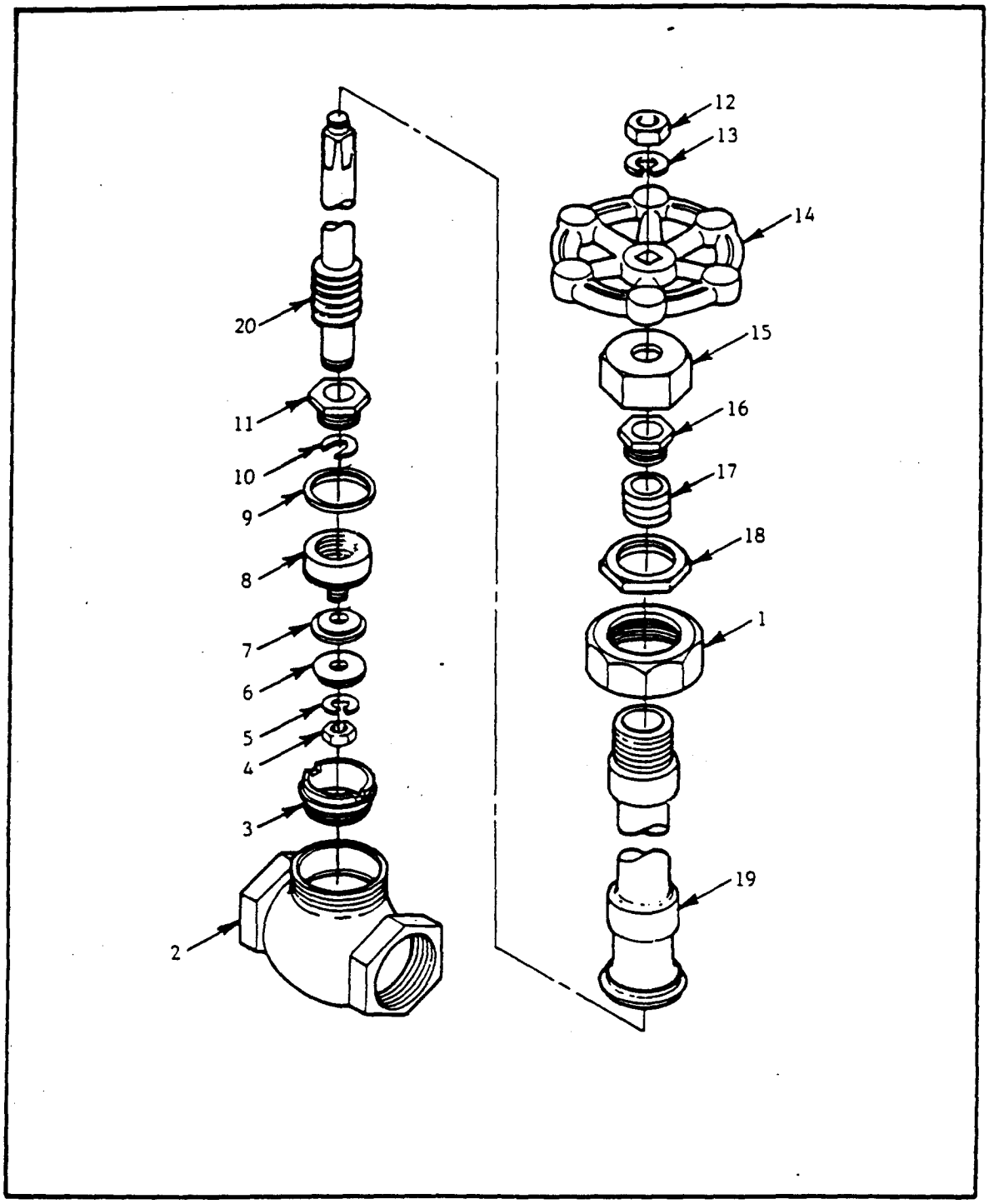

Figure 2-18. Valve Assembly, 2 Inch Globe

FIG. & INDEX NO.	PART NO.	FSCM	DESCRIPTION 1 2 3 4 5 6 7	UNITS PER ASSY.	USABLE ON CODE	SMR CODE
18-	ES1566-816	16750	VALVE ASSEMBLY, 2 in. Globe..... (V-8) (See Fig. 7 for NHA)	1		
	8140520-01	34351	.DECAL, Valve Identification..... (V-8) (Requisition in accordance with AFR 6-1, Chapter 12)	1		
-1	1566-816-10	16750	.NUT, Bonnet, 2 in. Valve, BRZ...	1		XBO
-2	1566-816-13	16750	.BODY, 2 in. Valve, BRZ.....	1		XAO
-3	1566-816-2-03	16750	.SEAT RING, 2 in. Valve BRZ.....	1		XBO
-4	1566-816-2-05	16750	.DISC NUT, 2 in. Valve BRZ.....	1		XBO
-5	1566-816-2-04	16750	.LOCK WASHER, 2 in. Valve BRZ....	1		XBO
-6	1566-816-2-02	16750	.DISC RETAINER, 2 in. Valve BRZ..	1		XBO
-7	1566-816-2-01	16750	.DISC INSERT, 2 in. Valve KEL-F..	1		PAOZZN
-8	1566-816-2-06	16750	.DISC HOLDER, 2 in. Valve BRZ....	1		XBO
-9	1566-816-14	16750	.LOCK NUT RETAINER, 2 in. Valve..	1		XBO
-10	1566-816-15	16750	.RING, Horseshoe, 2 in. Valve....	1		XBO
-11	1566-816-12	16750	.DISC LOCK NUT, 2 in. Valve BRZ..	1		XBO
-12	1566-816-3	16750	.NUT, Handwheel, 2 in. Valve BRS.	1		XBO
-13	1566-816-11	16750	.LOCK WASHER, 2 in. Valve.....	1		XBO
-14	1566-816-4	16750	.HANDWHEEL, 2 in. Valve.....	1		PAOZZN
-15	1566-816-5	16750	.PACKING NUT, 2 in. Valve BRS....	1		XBO
-16	1566-816-7	16750	.PACKING GLAND, 2 in. Valve BRS..	1		XBO
-17	1566-816-9	16750	.PACKING, 2 in. Valve Teflon.....	1		XBO
-18	1566-816-8	16750	.LOCK NUT, 2 in. Valve BRS.....	1		XBO
-19	1566-816-6	16750	.BONNET ASSEMBLY, 2 in. Valve....	1		XAO
-20	1566-816-1	16750	.STEM ASSEMBLY, 2 in. Valve BRZ..	1		XAO

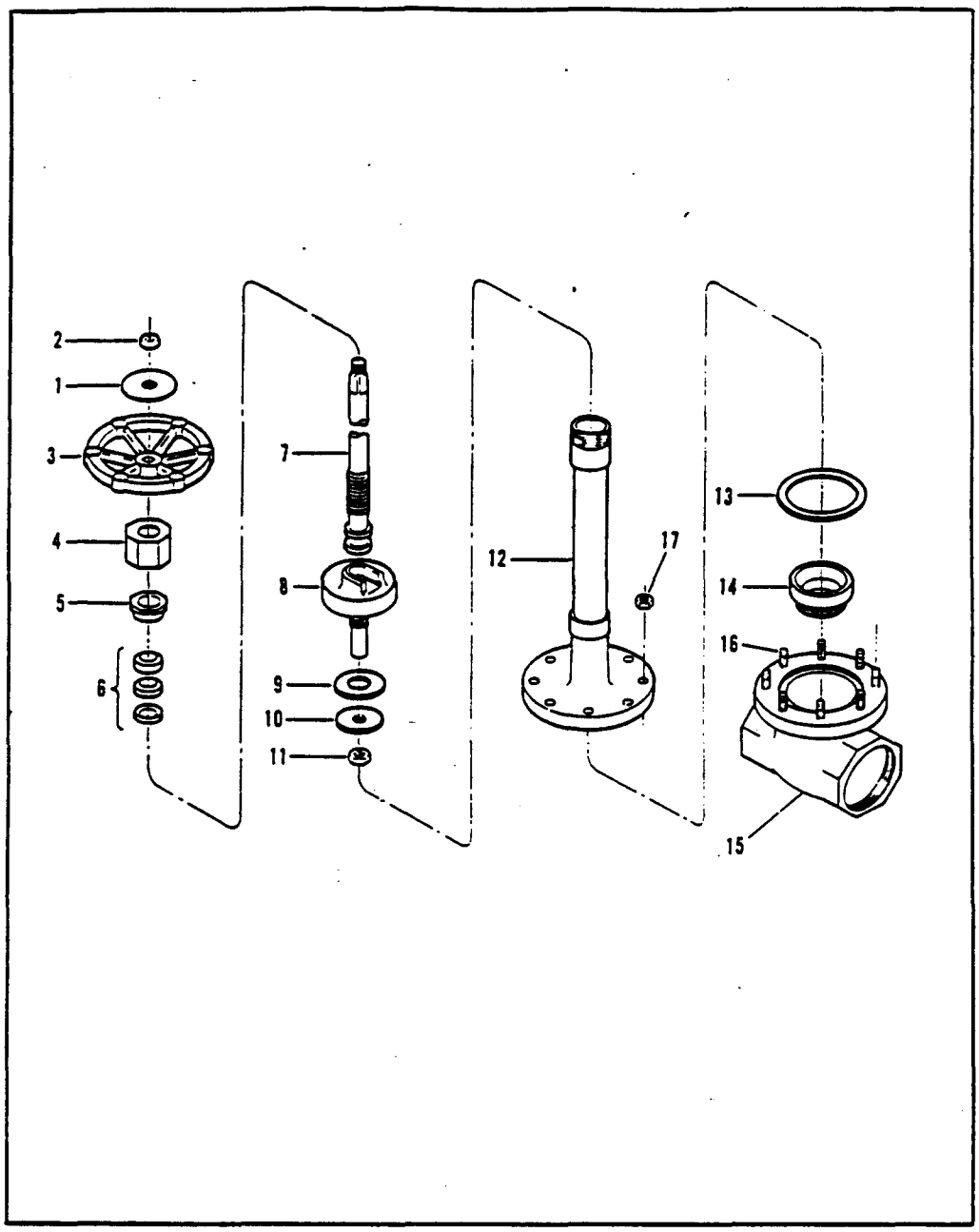

Figure 2-19. Valve Assembly, 3 Inch Globe

FIG. & INDEX NO.	PART NO.	FSCM	DESCRIPTION 1 2 3 4 5 6 7	UNITS PER ASSY.	USABLE ON CODE	SMR CODE
19-	7K102X64	48422	VALVE ASSEMBLY, 3 in. Globe..... (V-10) (See Fig. 5 for NHA)	1		
-1	8140520-01	34351	.DECAL, Valve Identification..... (V-10) (Requisition in accordance with AFR 6-1, Chapter 12)	1		
-2	30023560200000		.NUT, Handwheel.....	1		
-3	1D253600980000		.HANDWHEEL, Valve.....	1		
-4	1F339230850000		.NUT, Packing.....	1		
-5	1F299900200000		.GLAND, Packing.....	1		
-6	30093433760000	48422	.PACKING SET, Teflon.....	1		
-7	11217031730200		.STEM, Valve.....	1		
-8	15658890870000	48422	.DISC, Holder.....	1		
-9	30086812690000	48422	.DISC, Valve Insert.....	1		
-10	10086910200000	48422	.DISC, Valve Plate.....	1		
-11	30046365050A00	48422	.NUT, Plain Hex.....	1		
-12	1121700ASSEMD2		.BONNET, Valve.....	1		
-13	3E573103060000	48422	.GASKET, Bonnet.....	1		
-14	1E534010870000	48422	.SEAT, Ring.....	1		
-15	10529440870000		.BODY, Valve..... (ATTACHING PARTS)	1		
-16	3F244372260600	48422	.STUD.....	8		
-17	30082240690000	48422	.NUT, Hex.....	8		

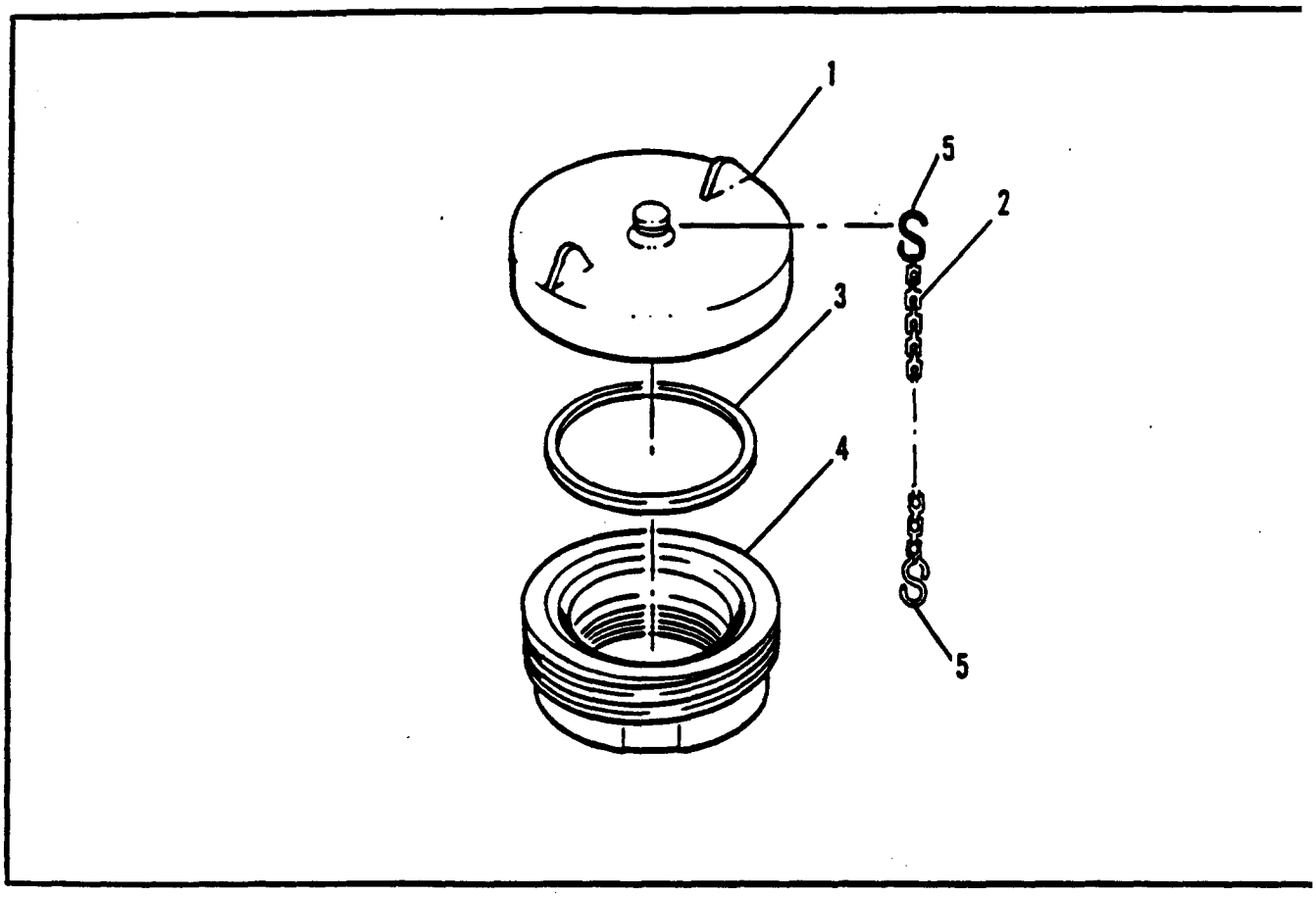

Figure 2-20. Coupling Assembly, 1 Inch Male Half

FIG. & INDEX NO.	PART NO.	FSCM	DESCRIPTION 1 2 3 4 5 6 7	UNITS PER ASSY.	USABLE ON CODE	SMR CODE
20-	8991173	18876	COUPLING ASSEMBLY 1 in. Male..... Half (See Fig. 6 for NHA)	1		
-1	8987869		.CAP, Coupling.....	1	A	PAOZZ
	8987892		.CAP, Coupling.....	1	B	PAOZZ
-2	8034683		.CHAIN, Brass, 12 in. Lg. (Fabricated Using Bulk Stock NSN 4010-00-228-9964)	1		PAOZZ
-3	8987833		.GASKET, Coupling.....	1	A	PAOZZ
	8987834		.GASKET, Coupling.....	1	B	PAOZZ
-4	8987855		.SEAT, Coupling.....	1	A	PAOZZ
	8987879		.SEAT, Coupling.....	1	B	PAOZZ
-5	MS87006-63		.HOOK, "S".....	1		PAOZZ

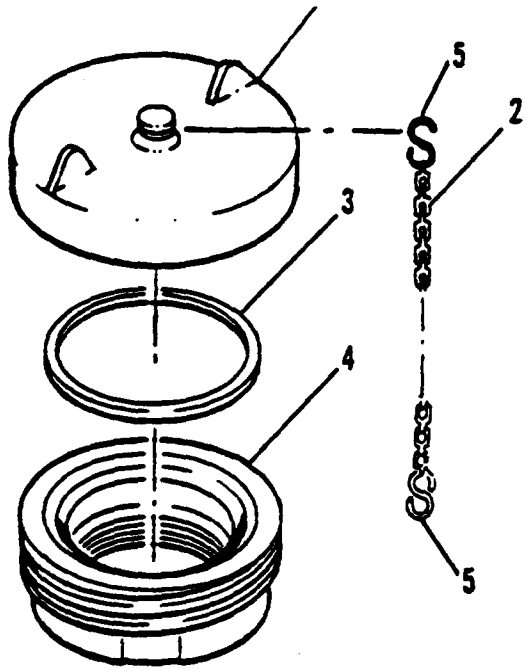

Figure 2-21. Coupling Assembly, 3-1/2 Inch Male Half

FIG. & INDEX NO.	PART NO.	FSCM	DESCRIPTION 1 2 3 4 5 6 7	UNITS PER ASSY.	USABLE ON CODE	SMR CODE
21-	55043-35-002	00255	COUPLING ASSEMBLY, LOX 3-1/2 in.. (LC) (See Fig. 7 for NHA)	1		
-1	8984990	18876	.CAP, Coupling.....	1	A	PAOZZN
	8987896	18876	.CAP, Coupling.....	1	B	PAOZZN
-2	8034683	18876	.CHAIN, Brass, 12 in. Lg. (Fabricated Using Bulk Stock NSN 4010-00-228-9964)	1		PAOZZN
-3	8987837	18876	.GASKET, Coupling.....	1	A	PAOZZN
	8987836	18876	.GASKET, Coupling.....	1	B	PAOZZN
-4	8984433	18876	.SEAT, Coupling.....	1	A	PAOZZN
	8987865	18876	.SEAT, Coupling.....	1	B	PAOZZN
-5	MS87006-63		.HOOK, "S".....	1		PAOZZN

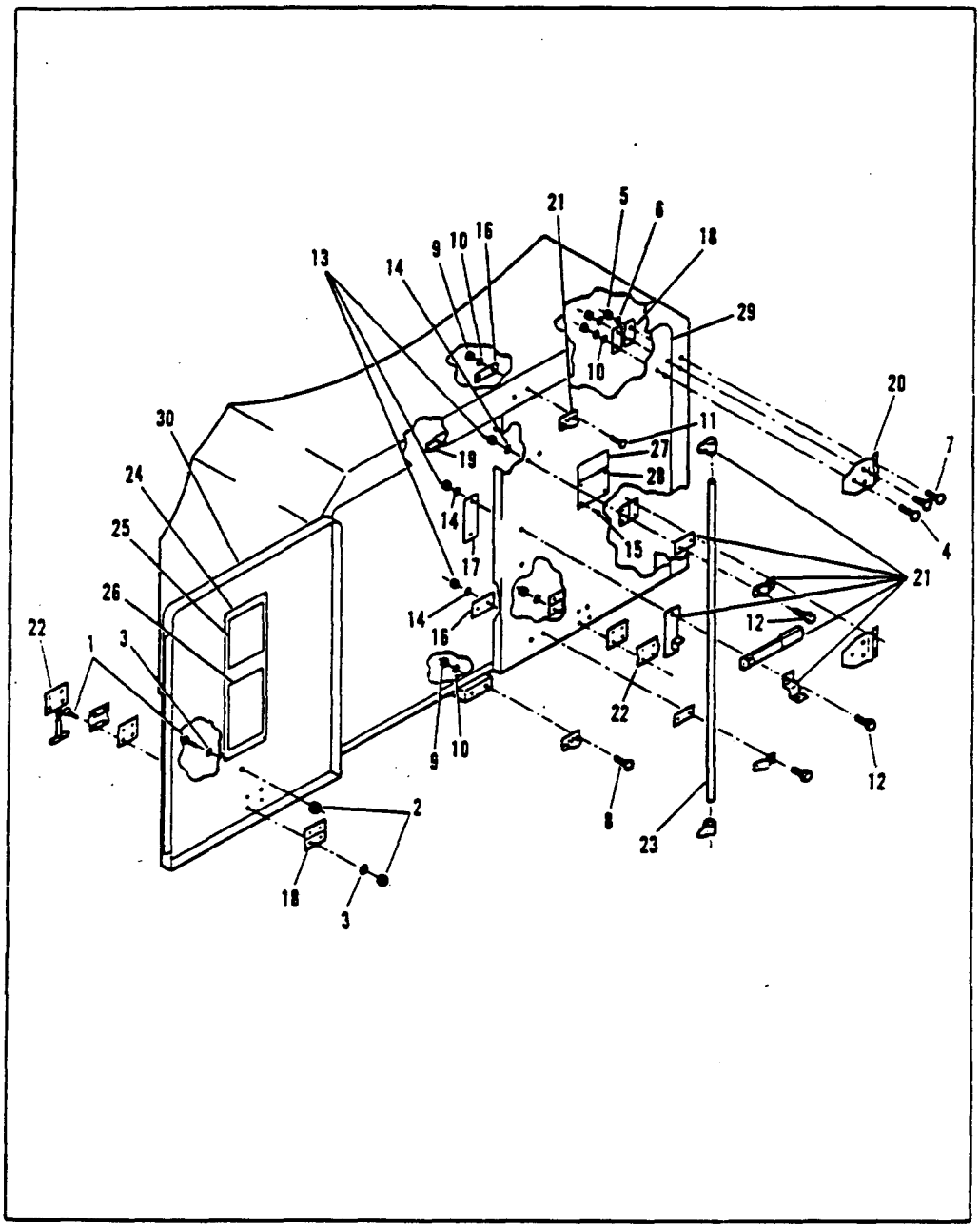

Figure 2-22. Cabinet Assembly

FIG. & INDEX NO.	PART NO.	FSCM	DESCRIPTION 1 2 3 4 5 6 7	UNITS PER ASSY.	USABLE ON CODE	SMR CODE
22-	80-361		CABINET ASSEMBLY, (See Figure 1.. for NHA)	1		
			(ATTACHING PARTS)			
-1	MS31957-67		.SCREW, Rd. Hd. 10-24 NC x 1 in.. Lg.	12		PAOZZN
-2	FF-N-836	81348	.NUT, 10-24NC, Elastic Stop.....	12		PAOZZN
-3	AN960-10		.WASHER, Flat No. 10.....	16		
-4	MS35206-280		.SCREW, Rd. Hd. 1/4-20 NC x 5/8.. in. Lg.	12		
-5	MS51943-31		.NUT, 1/4-20NC, Elastic Stop.....	20		PAOZZN
-6	MS35338-44		.WASHER, Flat, 1/4" Nom.....	20		PAOZZN
-7	MS35206-289		.SCREW, Rd. Hd. 1/4-20NC x 2-1/2. in. Lg.	8		PAOZZN
-8	MS51959-113		.SCREW, Flat Hd., 3/8-16 NC x.... 1-1/2 in. Lg.	2		PAOZZN
-9	MS51943-35		.NUT, 3/8-16NC, Elastic Stop.....	4		PAOZZN
-10	AN960-616		.WASHER, Flat, 3/8 in. Nom.....	8		PAOZZN
-11	MS51959-117		.SCREW, Flat Hd. 3/8-16NC x..... 2-1/2 in. Lg.	2		PAOZZN
-12	MS90728-38		.BOLT, Hex. Hd. 5/16-18 NC x..... 1-1/2 in. Lg.	6		PAOZZN
-13	MS51943-33		.NUT, 5/16-18NC, Elastic Stop....	6		PAOZZN
-14	AN960-516		.WASHER, Flat, 5/16 in. Nom.....	6		PAOZZN
-15	AD56BS	07707	.RIVET, Pop.....	4		PAOZZN
			----*----			
-16	80·361-22		.PLATE, 16 GA., S/S, 2 5 in.....	1		MOO
-17	80-361-23		.PLATE, 16 GA., S/S, 1-1/2 x 5 in	1		MOO
-18	80-361-24		.PLATE, 16 GA., S/S, 1 x 3 in....	12		MOO
-19	P384	52301	.WEATHERSTRIPPING, Door.....	1		PAOZZN
-20	5867	19220	.HINGE, Door.....	4		MOO
-21	7502	19220	.LOCK, Door, Bar.....	1		PAOZZN
-22	5601U	19220	.HOLDER, Door.....	2		PAOZZN
-23	80-361-19		.TUBE, Galv. Pipe, 3/4 x 41-11/16 in. Lg.	1		MOO
-24	80-791		.PLATE, Decal Installation.....	1		PAOZZN
-25	8140513-01 *	98750	.DECAL, Flow Schematic.....	1		PAOZZN
-26	8140514-01 *	98750	.DECAL, Operating Instructions...	1		PAOZZN
-27	8140512-01 *	98750	.DECAL, Lifting Instructions.....	1		PAOZZN
-28	44078	98750	.PLATE, Manufacturer's Data.....	1		PAOZZN
-29	71-208-1		.DOOR, Right Hand.....	1		PAFZZN
-30	71-208-2		.DOOR, Left Hand.....	1		PAFZZN
-31	71-182		.HOUSING, Cabinet (See Fig. 4 for Attaching Hardware)	1		AOO

FIG. & INDEX NO.	PART NO.	FSCM	DESCRIPTION 1 2 3 4 5 6 7	UNITS PER ASSY.	USABLE ON CODE	SMR CODE
			*Requisition Decals in accordance with AFR 6-1, Chapter 12			

SECTION III

NUMERICAL INDEX

PART NO.	FIG. & INDEX NO.	UNITS PER ASSY.	SMR CODE
AD56BS	4-16	96	PAOZZN
AD56BS	22-15	4	PAOZZN
AN911-8	13-9	2	PAOZZN
AN931B6-10	4-12	2	PAOZZN
AN960-10	22-3	16	
AN960-516	4-2	23	PAOZZN
AN960-516	22-14	6	PAOZZN
AN960-616	4-5	10	PAOZZN
AN960-616	22-10	8	PAOZZN
AN960C416	4-8	34	PAOZZN
AN960C416	12-3	4	PAOZZN
B-1VM4	12-11	1	PAOZZN
B-9434-N-RV-2	15-3	1	
B-9434-N-RV1	15-3	1	PAOZZN
B1VM4A	12-12	2	PAOZZN
D-57925	17-2	1	XBO
E-5150	17-14	1	XBO
E-66890	17-19	1	XAO
ES1566-088	6-8	1	PAOZZN
ES1566-088	7-10	1	PAOBZN
ES1566-088	17-	1	PAOBZN
ES1566-088	17-	1	PAOBZN
ES1566-816	7-9	1	PAOBZN
ES1566-816	18-	1	
F-33918	17-15	1	XBO
F-62954	17-8	1	XBO
F-63605	17-16	1	XBO
F-64235	17-20	1	XAO
F-8653	17-12	1	PAOZZN
FF-N-836	22-2	12	PAOZZN
I12161-3	5-23	1	PAOZZN
I12208-1	5-15	1	PAOZZN
I12209-2	5-16	2	PAOZZN
I12243-1	5-22	2	PAOZZN
I12246-4	5-20	2	PAOZZN
I12251-2	5-25	2	PAOZZN
I12284-7	5-14	1	PAOZZN
I12293-2	5-26	1	PAOZZN
I12360-6	5-13	1	PAOZZN
I12370-2	5-12	5	PAOZZN
I12500-6	5-21	1	MOO

PART NO.	FIG. & INDEX NO.	UNITS PER ASSY.	SMR CODE
I12505-4	5-18	2	MOO
I12508-7	5-17	1	MOO
I12514-6	5-24	6	MOO
I12722-4	12-13	A/R	MOO
I12723-5	10-6	1	MOO
I14971-6	5-19	1	PAOZZN
I15539-7	4-13	A/R	PAOZZN
I15695-2	4-14	1	PAOZZN
I15745-3	6-4	1	PAOZZN
I15745-3	7-8	1	PAOZZN
I15745-3	9-8	1	PAOZZN
I15747-5	5-5	1	PAOZZN
I15747-5	7-4	1	PAOZZN
I15747-5	9-4	1	PAOZZN
I15749-7	5-4	3	PAOZZN
I16068-1	2-3	1	PAFZZN
I16084-6	12-8	1	PAOZZN
I16175-6	8-5	3	PAOZZN
MS18154-58	4-10	4	PAOZZN
MS28776-430	2-2	1	PAFZZN
MS31957-67	22-1	12	PAOZZN
MS35206-280	22-4	12	
MS35206-285	4-9	14	PAOZZN
MS35206-289	22-7	8	PAOZZN
MS35291-162	8-4	2	PAOZZN
MS35291-163	8-3	4	PAOZZN
MS35307-308	12-1	4	PAOZZN
MS35307-358	9-9	4	PAOZZN
MS35307-40	5-1	16	PAOZZN
MS35307-417	6-1	1	PAOZZN
MS35307-417	7-5	4	PAOZZN
MS35307-417	9-5	4	PAOZZN
MS35307-467	8-1	4	PAOZZN
MS35307-468	7-1	4	PAOZZN
MS35307-468	9-1	4	PAOZZN
MS35338-44	22-6	20	PAOZZN
MS35338-48	6-3	4	PAOZZN
MS35338-48	7-7	4	PAOZZN
MS35338-48	9-7	4	PAOZZN
MS35338-50	5-3	16	PAOZZN
MS35338-50	7-3	4	PAOZZN

PART NO.	FIG. & INDEX NO.	UNITS PER ASSY.	SMR CODE
MS35338-50	9-3	4	PAOZZN
MS35690-1010	5-2	16	PAOZZN
MS35690-1010	7-2	4	PAOZZN
MS35690-1010	9-2	4	PAOZZN
MS51943-31	4-7	34	PAOZZN
MS51943-31	12-2	4	PAOZZN
MS51943-31	22-5	20	PAOZZN
MS51943-33	4-3	23	PAOZZN
MS51943-33	22-13	6	PAOZZN
MS51943-35	4-4	10	PAOZZN
MS51943-35	9-10	4	PAOZZN
MS51943-35	22-9	4	PAOZZN
MS51959-113	4-6	2	PAOZZN
MS51959-113	22-8	2	PAOZZN
MS51959-117	22-11	2	PAOZZN
MS51967-20	8-2	10	PAOZZN
MS51971-5	6-2	4	PAOZZN
MS51971-5	7-6	4	PAOZZN
MS51971-5	9-6	4	PAOZZN
MS51972-5	3-3	24	PAOZZN
MS87006-63	20-5	1	PAOZZN
MS87006-63	21-5	1	PAOZZN
MS87006-83	13-8	2	PAOZZN
MS90725-62	4-11	2	PAOZZN
MS90728-38	4-1	21	PAOZZN
MS90728-38	22-12	6	PAOZZN
NAS1454C8-0600	3-2	24	PAOZZN
P384	22-19	1	PAOZZN
TVT-1504	11-1	1	PAOZZN
5867	22-20	4	MOO
7502	22-21	1	PAOZZN
08980	17-7	1	XBO
10673	5-9	1	PAOBZN
44078	22-28	1	PAOZZN
80366	1-12	1	
80507	1-	1	
101844	7-11	1	PAOZZN
8034683	13-7	2	PAOZZN
8034683	20-2	1	PAOZZN
8034683	21-2	1	PAOZZN
8984433	21-4	1	PAOZZN
8984990	21-1	1	PAOZZN
8987833	20-3	1	PAOZZN
8987834	20-3	1	PAOZZN
8987836	21-3	1	PAOZZN

PART NO.	FIG. & INDEX NO.	UNITS PER ASSY.	SMR CODE
8987837	21-3	1	PAOZZN
8987840	13-4	1	PAOZZN
8987855	20-4	1	PAOZZN
8987856	13-3	1	PAOZZN
8987857	13-5	1	PAOZZN
8987865	21-4	1	PAOZZN
8987869	20-1	1	PAOZZN
8987870	13-6	1	PAOZZN
8987877	13-3	1	PAOZZN
8987878	13-5	1	PAOZZN
8987879	20-4	1	PAOZZN
8987891	13-6	1	PAOZZN
8987892	20-1	1	PAOZZN
8987896	21-1	1	PAOZZN
8991172	13-12	2	PAOZZN
8991173	6-11	1	PAOZZN
8991173	20-	1	
8991174	13-2	2	PAOZZN
8991180	7-13	1	PAOZZN
8998740	13-4	1	PAOZZN
89911711	6-12	1	PAOZZN
10086820200000	16-10	1	PAOZZN
10086910200000	19-10	1	
10529440870000	19-15	1	
11185650870000	16-14	1	
11217031730200	19-7	1	
15658890870000	19-8	1	
30019110200000	16-2	1	PAOZZN
30023560200000	19-2	1	
30082240690000	19-17	8	
30086722690000	16-9	1	PAOZZN
30086812690000	19-9	1	
30093043760000	16-6	1	PAOZZN
30093433760000	19-6	1	
09309BM73679	17-17	1	XAO
1-4MMOSS	12-10	2	PAOZZN
1121700ASSEMD2	19-12	1	
1210-1-12-316	5-11	1	PAOZZN
1566-088-1	17-20	1	XAO
1566-088-10	17-1	1	XBO
1566-088-11	17-13	1	PAOZZN
1566-088-12	17-11	1	XBO
1566-088-13	17-2	1	XBO
1566-088-14	17-9	1	XBO
1566-088-15	17-10	1	XBO

PART NO.	FIG. & INDEX NO.	UNITS PER ASSY.	SMR CODE
1566-088-2-01	17-7	1	XBO
1566-088-2-02	17-6	1	PAOZZN
1566-088-2-03	17-3	1	XBO
1566-088-2-04	17-5	1	PAOZZN
1566-088-2-05	17-4	1	XBO
1566-088-2-06	17-8	1	XBO
1566-088-3	17-12	1	XBO
1566-088-4	17-14	1	XBO
1566-088-5	17-15	1	XBO
1566-088-6	17-19	1	XAO
1566-088-7	17-16	1	XBO
1566-088-8	17-18	1	XAO
1566-088-9	17-17	1	XBO
1566-816-1	18-20	1	XAO
1566-816-10	18-1	1	XBO
1566-816-11	18-13	1	XBO
1566-816-12	18-11	1	XBO
1566-816-13	18-2	1	XAO
1566-816-14	18-9	1	XBO
1566-816-15	18-10	1	XBO
1566-816-2-01	18-7	1	PAOZZN
1566-816-2-02	18-6	1	XBO
1566-816-2-03	18-3	1	XBO
1566-816-2-04	18-5	1	XBO
1566-816-2-05	18-4	1	XBO
1566-816-2-06	18-8	1	XBO
1566-816-3	18-12	1	XBO
1566-816-4	18-14	1	PAOZZN
1566-816-5	18-15	1	XBO
1566-816-6	18-19	1	XAO
1566-816-7	18-16	1	XBO
1566-816-8	18-18	1	XBO
1566-816-9	18-17	1	XBO
1D253600980000	19-3	1	
1E514606900000	16-3	1	PAOZZN
1E534010870000	19-14	1	
1F299810200000	16-5	1	PAOZZN
1F299900200000	19-5	1	
1F339230850000	19-4	1	
1F356480200000	16-4	1	
1F402620870000	16-12	1	
1F402690870000	16-13	1	PAOZZN
1F403040690000	16-7	1	
1F607210690000	16-11	1	PAOZZN
1F629510690000	16-8	1	PAOZZN

PART NO.	FIG. & INDEX NO.	UNITS PER ASSY.	SMR CODE
2-328V747-75	8-6	1	PAOZZN
211-1214	6-9	1	PAOZZN
2216-BA	4-15	A/R	PAOZZN
2431-2T-2IN	8-9	1	PAOBZN
2IN36115T304	5-10	1	PAOZZN
30046365050A00	19-11	1	
367-B	12-9	1	PAOZZN
3E573103060000	19-13	1	
3F244372260600	19-16	8	
400-1-4-316	12-15	2	PAOZZN
400-2-4-316	12-16	3	PAOZZN
400-7-4-316	12-14	2	PAOZZN
400-8-4-316	12-17	1	PAOZZN
4171M2B	11-2	1	PAOZZN
49B6564	1-9	4	PAFZZN
508-0113	5-7	1	PAOBZN
55043-35-002	7-13	1	PAOZZN
55043-35-002	21-	1	
5601U	22-22	2	PAOZZN
59C6671-2-10	13-1	1	PAOZZN
600-2-4-315	10-2	1	PAOZZN
600-2-6-316	10-3	1	PAOZZN
600-2-6-316	15-4	1	PAOZZN
600-7-6-316	10-4	1	PAOZZN
67-063	2-1	1	PAFZZN
67-063-3	2-4	1	PAFZZN
70-302	1-13	1	
70-302-2-7	11-	1	
70-302-3-2-7	11-3	1	PAOZZN
71-182	22-31	1	AOO
71-208-1	22-29	1	PAFZZN
71-208-2	22-30	1	PAFZZN
7210100P1	10-5	1	PAOZZN
73-107	6-10	1	
73-107	7-12	1	
73-107	15-	2	
73-107-1	15-1	1	AOO
73-288	1-14	1	
73-288	12-	1	
75-28	3-4	1	PAOZZN
77-23-0011-00	14-	1	AOO
77-23-011-00	5-8	1	AOO
77-23-0310-17	14-1	1	PAOZZN
77-23-0310-17	14-3	1	PAOZZN
77-23-0310-17	14-4	1	PAOZZN

PART NO.	FIG. & INDEX NO.	UNITS PER ASSY.	SMR CODE
77-37-0028-65	14-2	1	PAOZZN
79-414-1-4	1-7	1	
79-414-1-4	8-	1	
79-416	1-2	1	
79-416	3-	1	
79-420	3-1	1	PAOZZN
7K0102RLEC-6	15-2	1	PAOBZN
7K10102RELC-1	17-	1	PAOBZN
7K102X485	10-1	1	PAOBZN
7K102X64	16-	1	
7K102X64	16-	1	
7K102X64	16-	1	
7K102X64	5-6	1	PAOBZN
7K102X64	19-	1	
7K102X64	5-6	1	PAOBZN
7K102X64	19-	1	
80-113	8-8	1	PAOZZN
80-114	8-7	1	PAOZZN
80-122	8-10	1	
80-123	8-11	1	
80-336	10-	1	
80-340-15	10-1	1	PAOBZN
80-340-15	16-	1	
80-340-15	16-	1	
80-340-15	16-	1	
80-343	1-11	1	
80-346	1-1	1	
80-346	2-	1	
80-346-3	2-5	1	
80-349	1-8	1	
80-349	9-	1	
80-361	1-3	1	
80-361	22-	1	
80-361-19	22-23	1	MOO
80-361-22	22-16	1	MOO
80-361-23	22-17	1	MOO
80-361-24	22-18	12	MOO
80-424	1-4	1	
80-424	5-	1	
80-425	1-6	1	
80-425	7-	1	
80-425-1	7-17	1	PAOZZN
80-425-2	7-16	1	PAOZZN
80-425-3	7-15	1	PAOZZN
80-425-4	7-14	1	PAOZZN

PART NO.	FIG. & INDEX NO.	UNITS PER ASSY.	SMR CODE
80-425-5	17-	1	PAOBZN
80-425-6	15-2	1	
80-426	1-5	1	
80-426	6-	1	
80-426-1	6-6	1	PAOZZN
80-426-2	6-5	1	PAOZZN
80-426-3	6-7	1	PAOZZN
80-488	12-4	1	MOO
80-791	22-24	1	PAOZZN
8044036-01	5-9*	1	
8140503-01	12-9*	1	PAOZZN
8140505-01	12-6*	1	
8140506-01	12-5*	1	
8140507-01	12-7*	1	
8140508-01	8-9*	1	PAOZZN
8140509-01	15-3*	1	
8140510-01	15-3*	1	
8140511-1	5-7*	1	
8140512-01	22-27*	1	PAOZZN
8140513-01	22-25*	1	PAOZZN
8140514-01	22-26*	1	PAOZZN
8140515-01	16-1	1	
8140516-01	16-1	1	
8140517-01	16-1	1	
8140518-01	17-	1	
8140519-01	17-	1	
8140520-01	18-*	1	
8140520-01	19-1	1	
8221044-01	1-10	4	
8221045-01	1-10	4	
8221308-01	11-2*	1	
8518589-01	12-8*	1	PAOZZN